Jonsered

SERVICE

I9500037

IPL, RT5, FT5, 1995-01

RT5, FT5

Spare parts
Ersatzteile
Pièces détachées
Reserve onderdelen
Repuestos
Reservdelar

REPAIR PARTS RT5

HANDLE ASSEMBLY

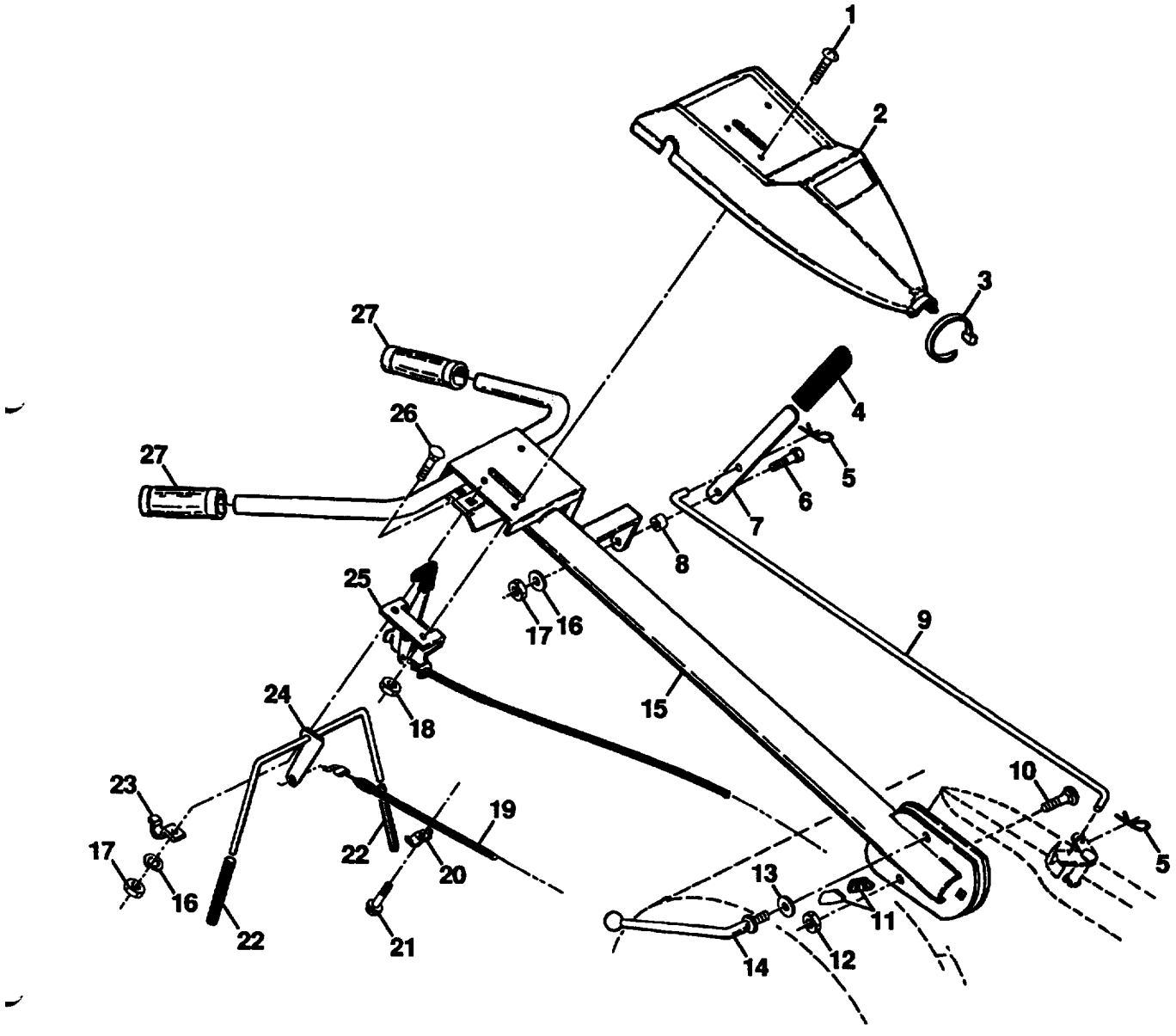

KEY NO.	PART NO.	DESCRIPTION
1	532 04 19-45	Screw, Pan Hd. #10-24
2	532 12 69-51	Panel, Control
3	532 10 41-64	Tie, Cable
4	532 12 47-97	Grip, Handle
5	532 12 47-88	Clip, Hairpin
6	532 08 13-28	Bolt, Shoulder
7	532 10 93-35	Handle, Shift
8	532 10 93-13	Grommet, Rubber
9	532 10 93-37	Rod, Shift
10	872 11 06-08	Bolt, Carriage 3/8-16 x 1 Gr. 5
11	532 10 92-29	Lock, Handle
12	873 68 06-00	Nut, Centerlock 3/8-16
13	819 13 16-14	Washer13/32x1x11Ga.
14	532 10 92-28	Lever, Lock, Handle
15	532 12 54-33	Handle

KEY NO.	PART NO.	DESCRIPTION
16	810 04 04-00	Washer, Lock 1J4
17	873 22 04-00	Nut, Hex 1/4-20
18	873 27 10-00	Nut, Keps#10-24 UNC
19	532 14 76-68	Cable, Clutch
20	532 00 94-84	Clip
21	817 02 10-08	Screw, Hex Washer Hd. Slotted #10-24 x 1/2
22	532 10 26-04	Grip, Bar, Control
23	532 10 27-44	Clamp, Bar, Control
24	532 10 52-16	Bar Assembly, Control
25	532 12 70-12	Control, Throttle
26	872 14 04-04	Bolt, Carriage 1/4-20 UNC x 1/2
27	532 14 05-28	Grip, Handle

NOTE: All component dimensions given in U.S. inches.
1 inch = 25.4 mm

REPAIR PARTS RT5

MAINFRAME, LEFT SIDE

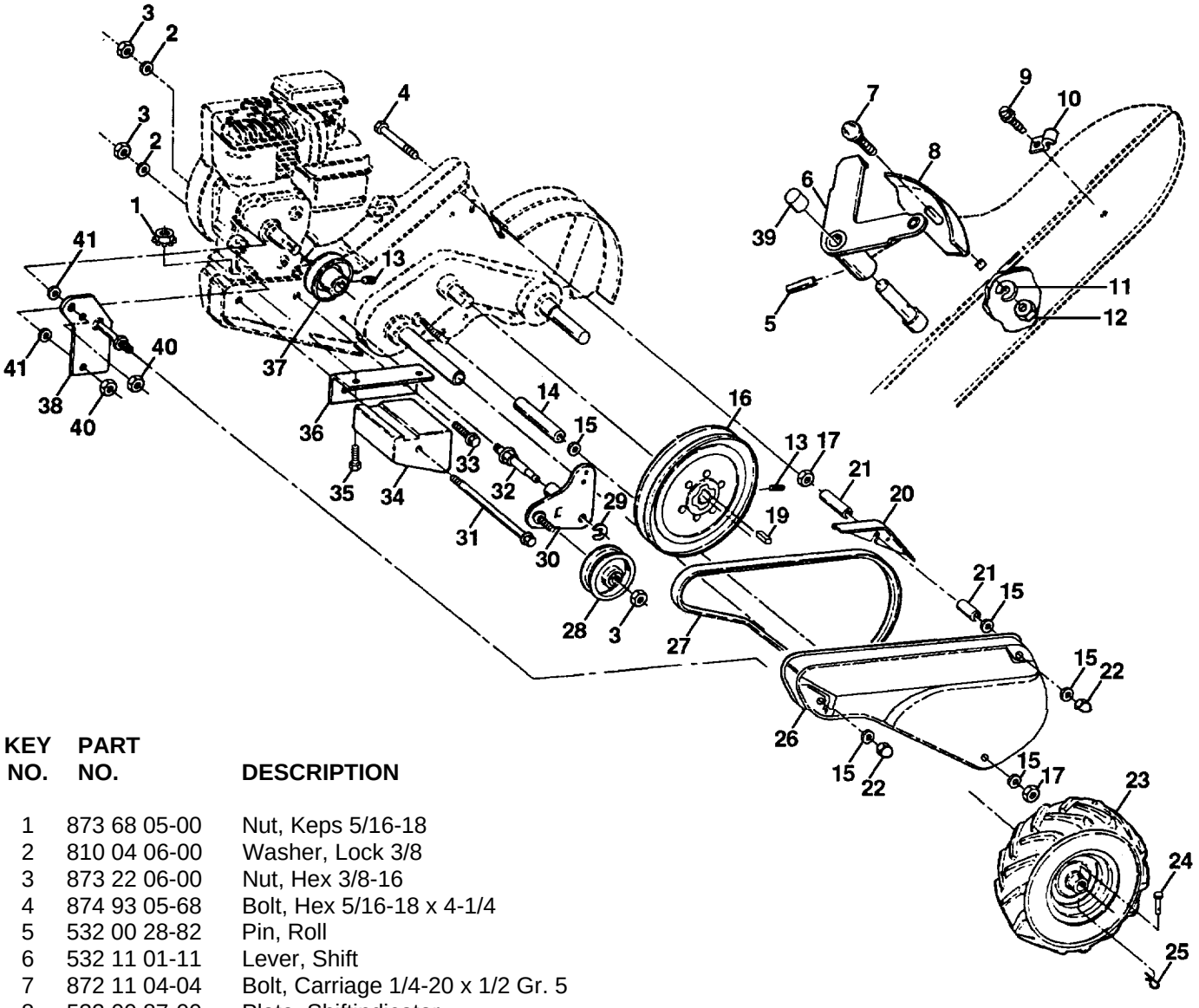

KEY NO.	PART NO.	DESCRIPTION
1	873 68 05-00	Nut, Keps 5/16-18
2	810 04 06-00	Washer, Lock 3/8
3	873 22 06-00	Nut, Hex 3/8-16
4	874 93 05-68	Bolt, Hex 5/16-18 x 4-1/4
5	532 00 28-82	Pin, Roll
6	532 11 01-11	Lever, Shift
7	872 11 04-04	Bolt, Carriage 1/4-20 x 1/2 Gr. 5
8	532 00 87-00	Plate, Shiftindicator
9	817 02 10-08	Screw, Hex, Washer Head, Slotted #10-24 x 1/2
10	532 00 94-84	Clip
11	810 04 04-00	Washer, Lock 1/4
12	873 22 04-00	Nut, Hex 1/4-20
13	823 23 05-06	Screw, Set, Hex 5/16-18 x 3/8
14	532 12 09-38	Spacer, Split 0.327 x 0.42 x 2.68
15	734 11 63-01	Washer 11/32 x 11/16 x 16 Ga.
16	532 10 04-73	Sheave, Transmission
17	873 22 05-00	Nut, Hex 5/16-18
18	532 11 06-51	Spacer, Split 0.327 x 0.42 x 1.75
19	532 00 26-49	Key, Square 3/16 x 1-1/8
20	532 11 06-53	Guard, Pinch Point
21	532 13 16-91	Spacer, Split 0.327 x 0.42 x 1.627
22	532 10 42-14	Nut, Cap 5/16-18
23	532 00 50-15	Tire
	532 12 89-52	Rim
	532 06 51-39	Tire Valve
24	532 12 68-75	Rivet, Drilled
25	532 12 47-88	Clip, Hairpin
26	532 12 54-08	Guard, Belt
27	532 13 28-01	Belt, V

KEY NO.	PART NO.	DESCRIPTION
28	532 10 46-79	Pulley, Idler
29	812 00 00-32	Ring, Klip
30	532 10 56-11	Bracket, Idler
31	532 10 23-84	Bolt, Hex 5/16-16 x 12
32	532 10 21-41	Shaft, Idler Arm
33	874 78 06-16	Bolt, Hex 3/8-16 x 1
34	532 10 23-83	Counterweight, L.H.
35	874 78 05-24	Bolt, Hex 5/16-18 x 1 -1 /2
36	532 10 23-31	Bracket, Reinforcement, L.H.
37	532 13 08-12	Sheave, Engine
38	532 13 15-56	Bracket, Guard Belt
39	532 14 00-62	Cap, Plunger Blk
40	873 22 04-00	Nut, Lock w/Insert 1/4-20
41	734 11 53-01	Washer, 9/32 x 5/8 x x16 Ga.

NOTE: All component dimensions given in U.S. inches.
1 inch = 25.4 mm

REPAIR PARTS RT5

MAINFRAME, RIGHT SIDE

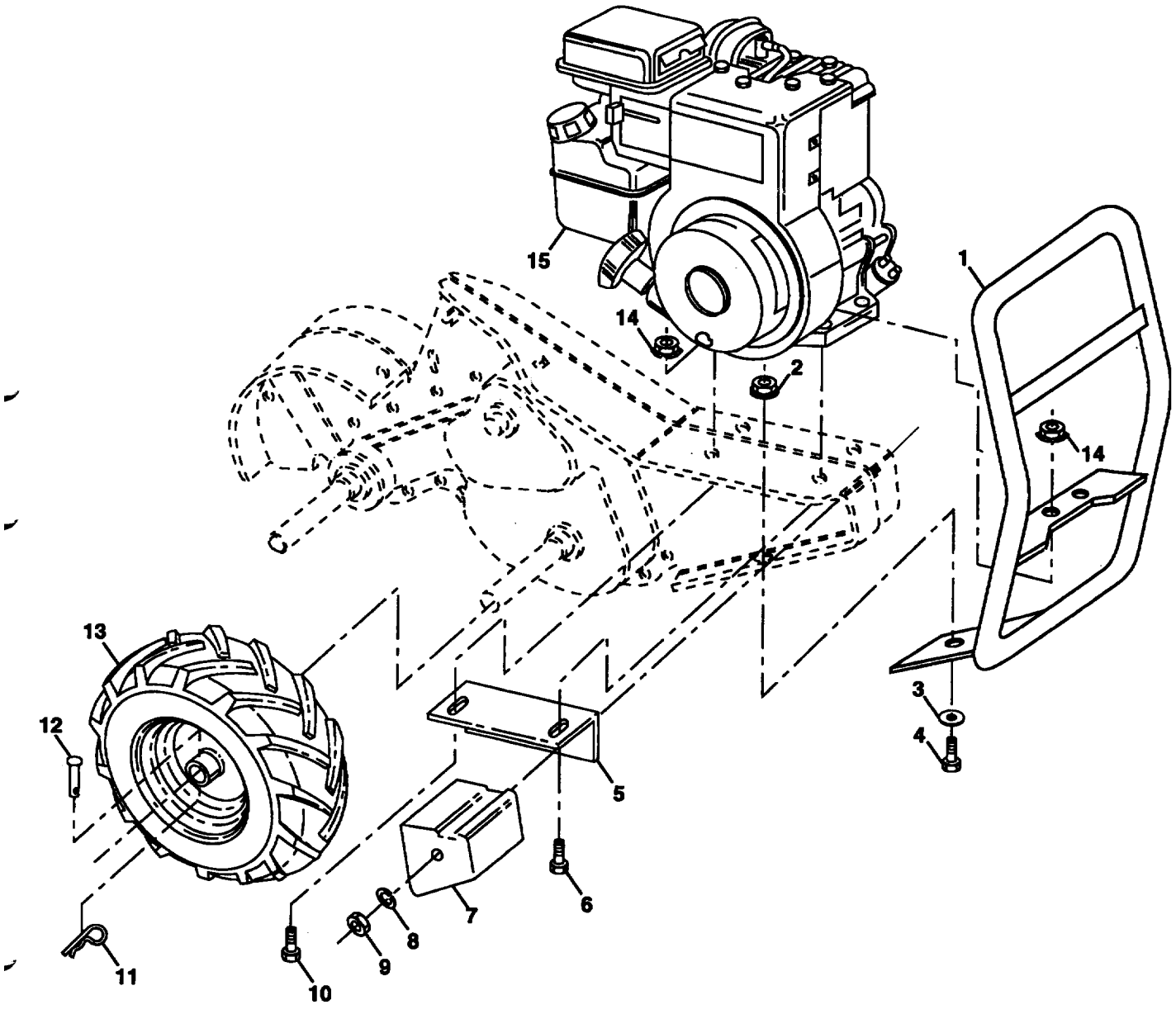

KEY NO.	PART NO.	DESCRIPTION
1	532 14 02-71	Bumper
2	873 68 05-00	Locknut, Hex, Flange 5/16-18
3	734 11 63-01	Washer 11/32 x 11/16 x 16 Ga.
4	874 78 05-12	Bolt, Hex 5/16-18 x 3/4
5	532 10 23-32	Bracket, Reinforcement
6	874 76 05-32	Bolt, Hex 5/16-18 x 2
7	532 10 21-73	CounterWeight, R.H.
8	810 04 06-00	Washer, Lock3/8
9	873 22 06-00	Nut, Hex3/8-16
10	874 78 05-24	Bolt, Hex 5/16-18 x 1-1/2

KEY NO.	PART NO.	DESCRIPTION
11	532 12 47-88	Clip, Hairpin
12	532 12 68-75	Rivet, Drilled
13	532 00 50-15	Tire
	532 12 89-52	Rim
	532 06 51-39	Tire Valve
14	873 68 05-00	*Nus, Keps 5/16-18
15	- - - - - - - - - -	Engine, Briggs & StraKon Model No. 135202

NOTE: All component dimensions given in U.S. inches. 1 inch = 25.4 mm

REPAIR PARTS RT5

TRANSMISSION

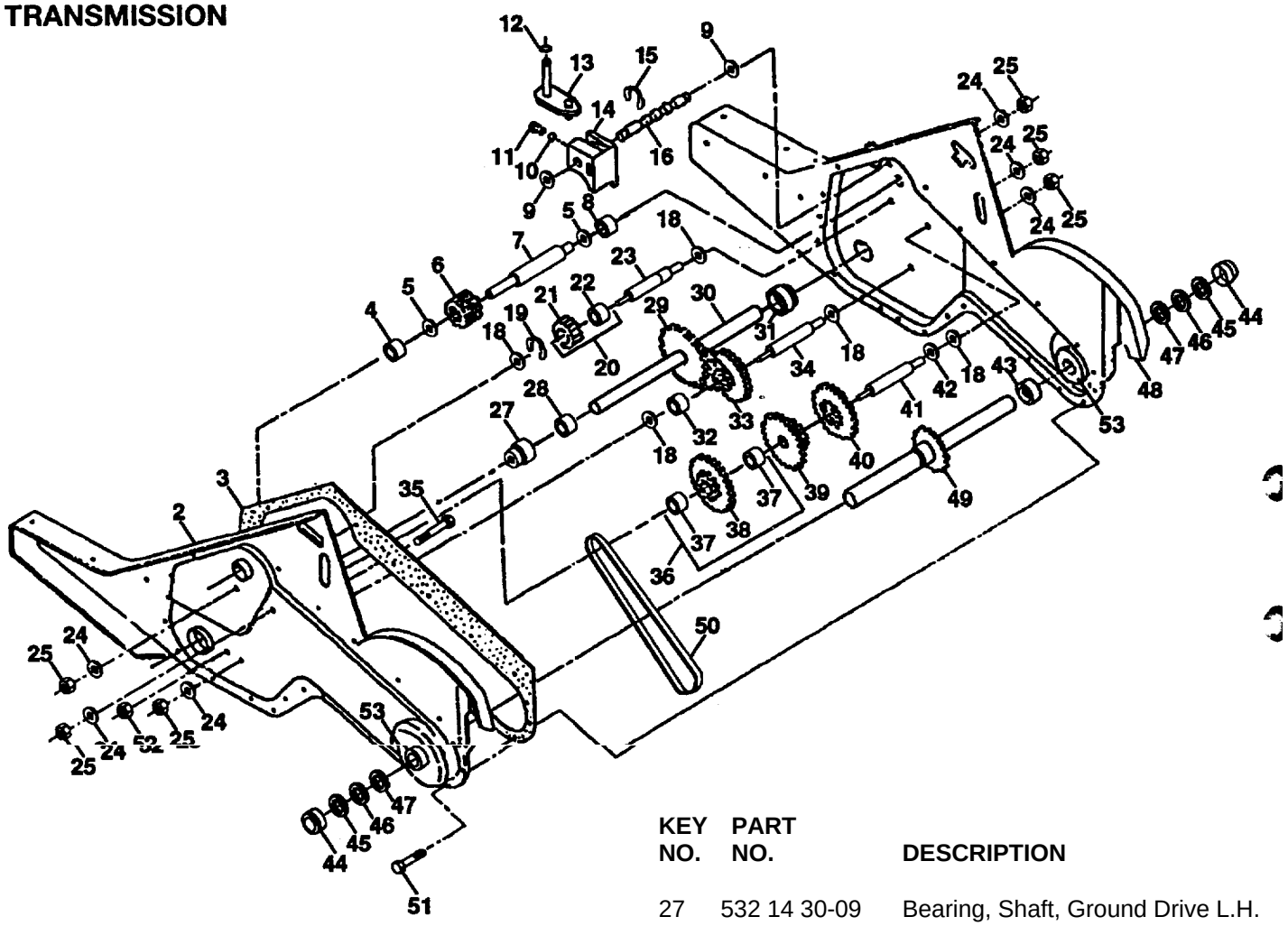

KEY NO.	PART NO.	DESCRIPTION
1	532 14 05-37	Transmission Assembly (Includes Key Nos. 2-53)
2	532 13 95-44	Gearcase, L.H. w/Bearing (Includes Key No. 4)
3	532 10 62-11	Gasket, Gearcase
4	532 00 50-20	Bearing, Needle
5	532 00 13-70	Washer, Thrust 5/8 x 1.10 x 1/32
6	532 13 73-35	Pinion, Input
7	532 10 21-10	Shaft, Input
8	532 12 47-92	Bearing, Needle
9	532 10 21-36	Washer, Seal
10	532 12 46-97	Ball, Steel
11	532 10 03-71	Spring, Shift, Fork
12	532 10 61-60	O-Ring
13	532 14 21-45	Arm,. Shift
14	532 00 83-53	Fork, Shift
15	812 00 00-39	Ring, Klip
16	532 14 05-25	Shaft, Shift
18	532 00 43-58	Washer
19	812 00 00-40	Ring, Klip
20	532 10 21-14	Gear, Assembly, Reverse Idler (Includes Key Nos. 21 and 22)
21	532 10 21-15	Gear, Reverse Idler
22	532 00 68-03	Bearing, Needle
23	532 10 21-11	Shaft, Reverse Idler
24	810 04 07-00	Washer, Lock 7/16
25	873 61 07-00	Nut, Hex 7/16-20

KEY NO.	PART NO.	DESCRIPTION
27	532 14 30-09	Bearing, Shaft, Ground Drive L.H.
28	532 10 63-90	Spacer 0.765 x 1.125 x 1.23
29	532 10 21-34	Chain #35-50 Pitch
30	532 12 44-58	Ground Shaft Assembly
31	532 14 30-08	Bearing, Shaft, Ground Drive R.H.
32	532 10 63-88	Spacer 0.70 x 1.00 x 1.150
33	532 10 21-21	Sprocket and GearAssembly
34	532 10 21-12	Shaft, Reduction (2nd)
35	532 10 21-01	Screw, Whiz, Lock 5/16-18 x 3-1/2
36	532 13 73-00	Sprocket Assembly w/Bearing (Includes Key Nos. 37 and 38)
37	532 12 47-91	Bearing, Needle
38	532 13 73-00	Sprocket, Tine
39	532 10 53-45	Gear, Cluster, Red 1 st & 2nd
40	532 10 53-46	Gear, Reverse
41	532 00 83-58	Shaft, Reduction (1st)
42	532 00 42-20	Washer, Thrust
43	532 10 61-46	Spacer 1.01 x 1.75 x 0.760
44	532 00 96-72	Cup, Formed
45	532 10 21-44	Ring, Spiral
46	532 14 05-76	Seal, Ring, Rubber
47	532 12 46-98	Seal, 0il
48	532 13 95-46	Gearcase, R.H. w/Bearing (Includes Key No. 8)
49	532 13 26-88	Shaft, Tine
50	532 10 61-47	Chain, Roller#50-50 Pitch
51	874 78 04-08	Screw 1/4-20 x 1/2
52	873 22 05-00	Nut, Hex 5/16-18
53	532 12 22-04	Kit Bearing
- -	532 00 60-66	Grease, Plastilube#1

NOTE: Allcomponent dimensions given in U.S. inches
1 inch = 2.54 mm

REPAIR PARTS RT5

TINE SHIELD

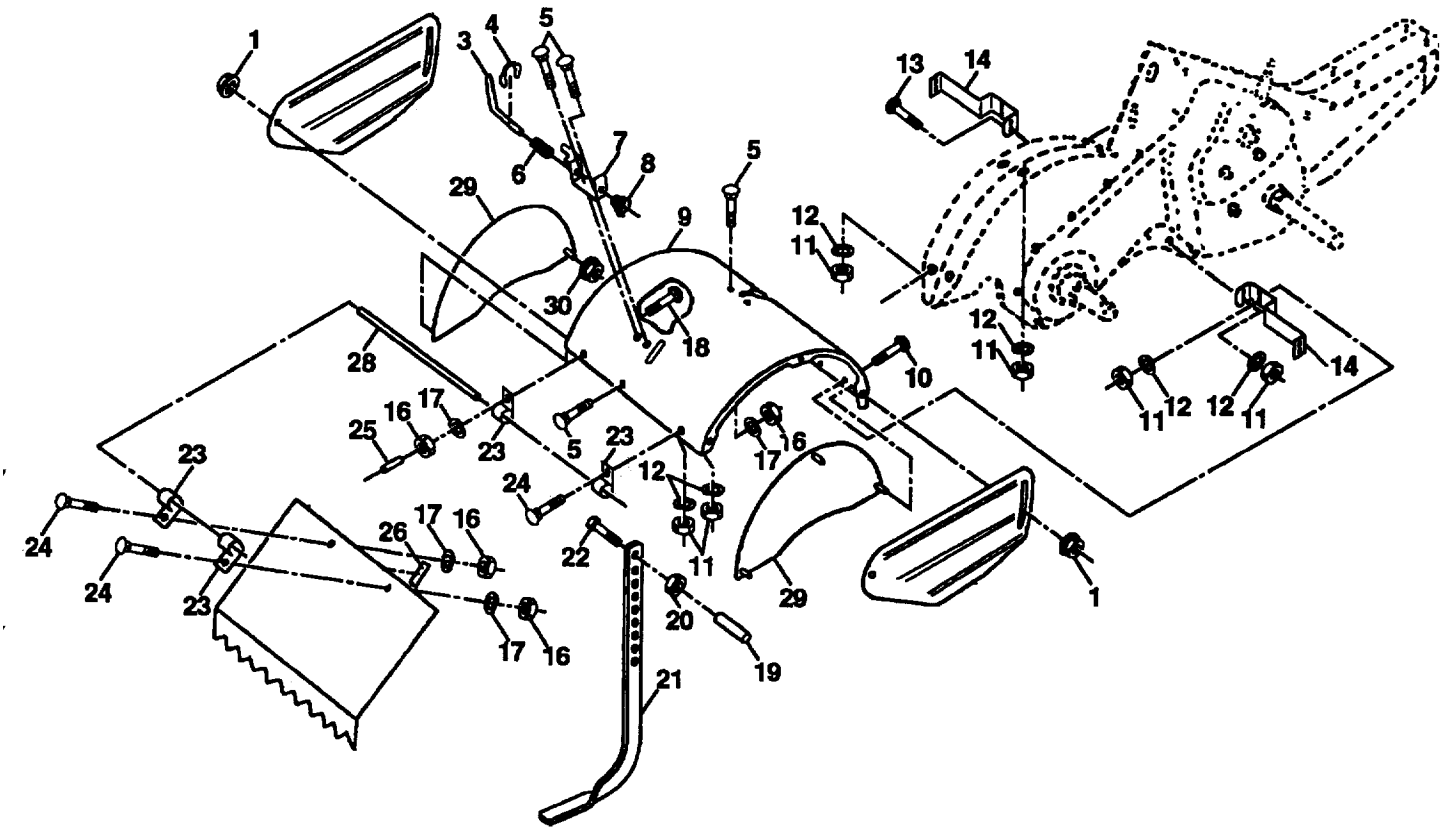

KEY NO.	PART NO.	DESCRIPTION
1	873 68 05-00	Nut, Flange 5/16-18
3	532 00 83-93	Pin, Stake, Depth
4	812 00 00-36	Ring, Klip
5	872 14 05-06	Bolt, Carriage 5/16-18 x 3/4 Gr. 5
6	532 00 83-94	Spring
7	532 00 83-92	Bracket, Latch
8	532 10 92-30	Spring, Depth Stake
9	532 14 20-36	Shield, Tine
10	872 14 05-08	Bolt, Carriage 5/16-18 UNC x 1
11	873 22 05-00	Nut, Hex5/16-18
12	810 04 05-00	Washer, Lock 5/16
13	872 11 05-10	Bolt, Carriage5/16-18x 1-1/4
14	532 12 43-11	Bracket, Shield Tine
16	873 22 04-00	Nut. Hex 1/4-20
17	810 04 04-00	Washer, Lock 1/4
18	872 04 04-10	Bolt, Carriage 1/4-20 x 1-1/4 Gr. 5
19	532 10 27-01	Grip
20	873 22 06-00	Nut, Hex 3/8-16
21	532 14 44-37	Stake, Depth
22	874 93 06-32	Bolt, Hex 3/8-16 x 2
23	532 00 44-40	Hinge
24	872 14 04-04	Bolt, Carriage 1/4-20 x 1/2 Gr. 5
25	532 12 47-17	Cap, Vinyl
26	532 10 92-27	Pad, Idler
28	532 12 05-88	Pin, Hinge
29	532 14 20-37	Shield, Side
30	873 68 05-00	Locknut, Flange 5/16-18

NOTE: All component dimensions given in U.S. inches.
1 inch = 25.4 mm

REPAIR PARTS RT5

TINE ASSEMBLY

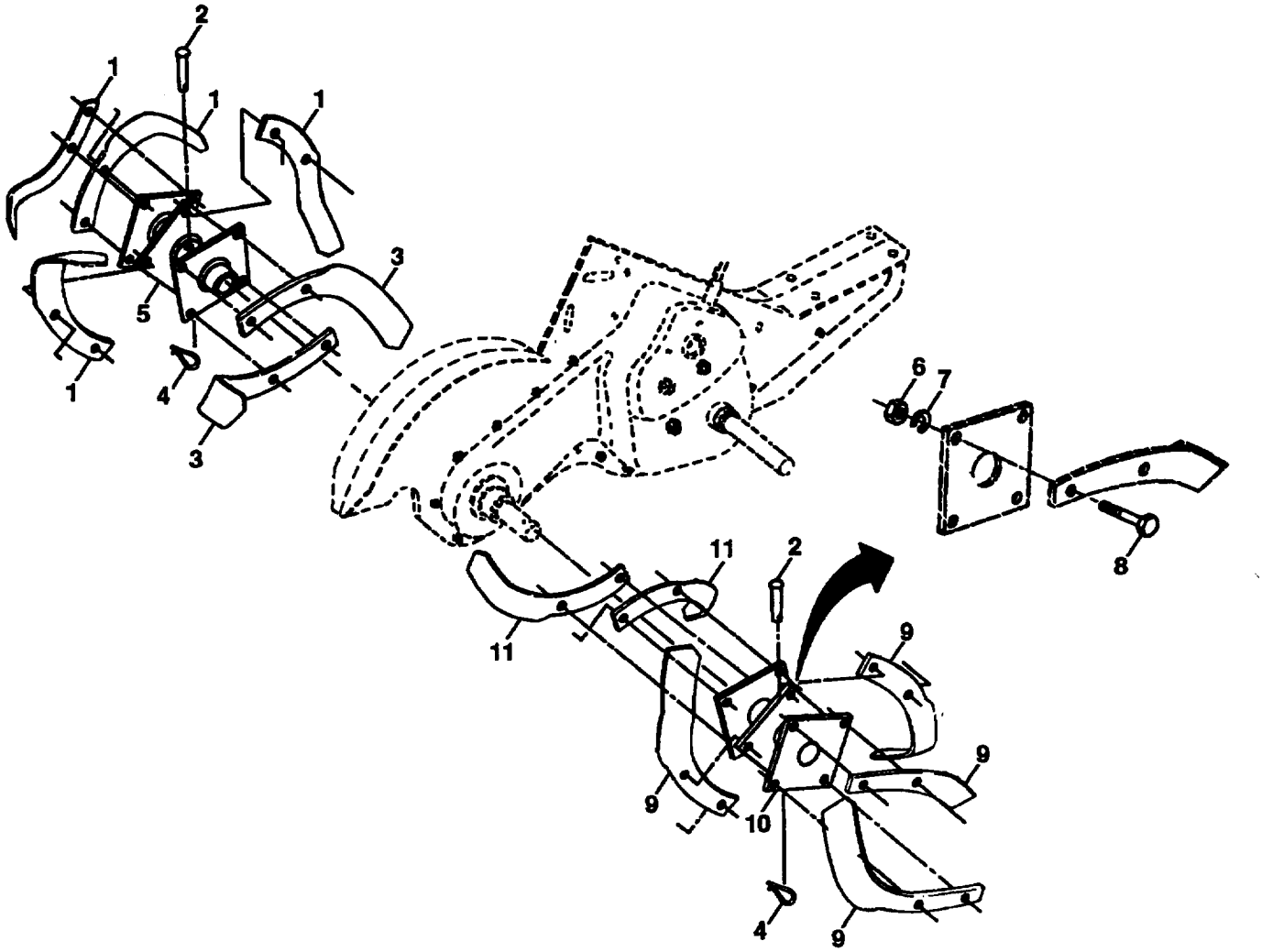

KEY NO.	PART NO.	DESCRIPTION
1	532 00 65-54	Tine, Outer, L.H.
2	532 13 26-73	Clevis Pin
3	532 00 65-54	Tine, Inner, L.H.
4	532 12 46-60	Clip, Hairpin
5	532 13 27-27	Assembly, Hub and Plate, L.H.
6	873 61 06-00	Nut, Hex 3/8-24
7	810 04 06-00	Washer, Lock 3/8
8	874 61 06-16	Bolt, Hex 3/8-24 x 1
9	532 00 65-55	Tine, Outer, R.H.
10	532 13 27-28	Assembly, Hub and Plate, R.H.
11	532 00 65-55	Tine, Inner, R.H.

NOTE: All component dimensions given in U.S. inches.
1 inch = 25.4 mm

REPAIR PARTS FT5

HANDLE ASSEMBLY

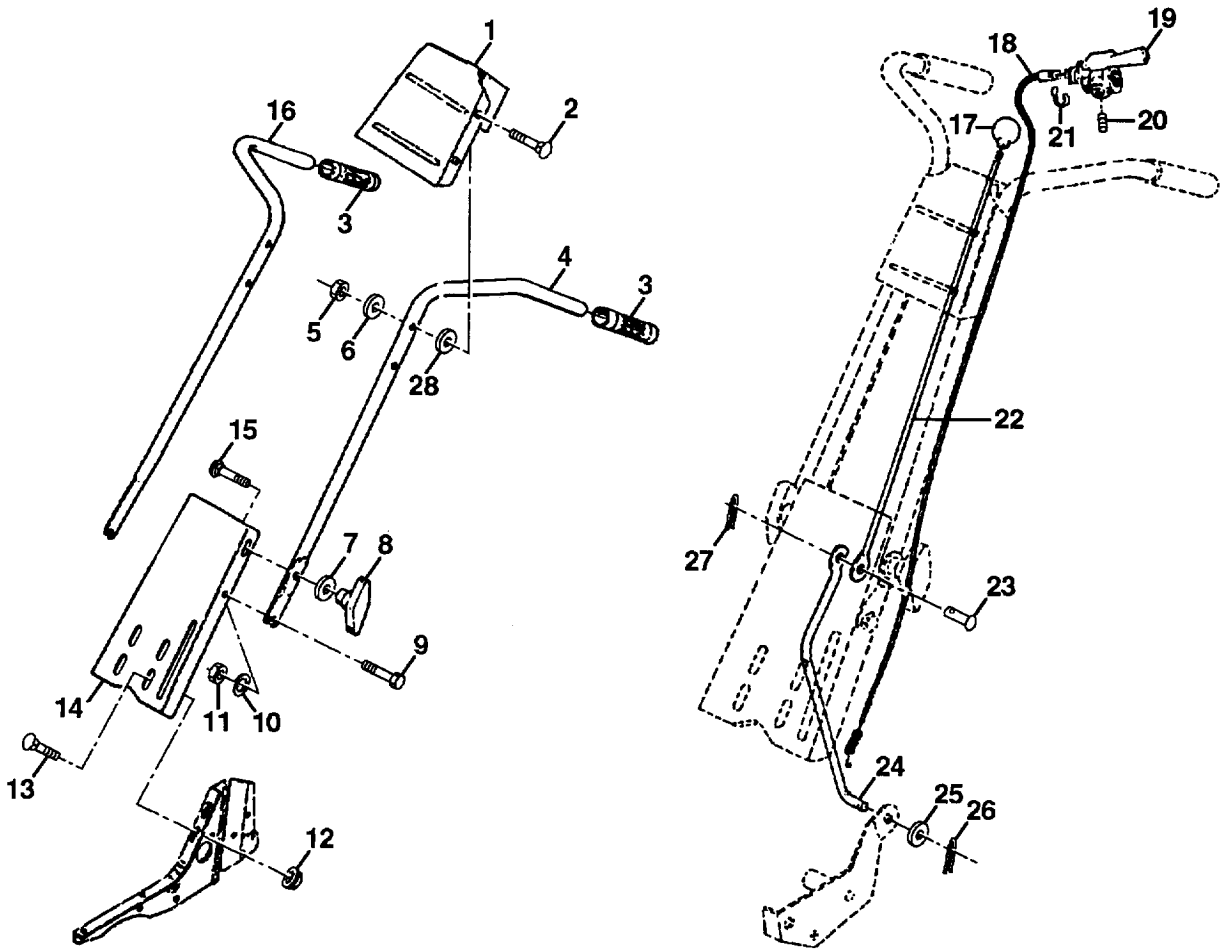

KEY NO.	PART NO.	DESCRIPTION
1	532 12 54-37	Bracket, Handle
2	872 14 05-12	Bolt, Carriage 5/16-18 UNC x 1-1/4
3	532 14 05-36	Grip, Handle
4	532 00 26-23	Handle, L.H.
5	873 68 05-00	Locknut, Crown 5/16-18
6	734 11 63-01	Washer 11/32 x 11/16 x 16 Ga.
7	734 11 72-01	Washer 3/8 x 7/8 x 14 Ga.
8	532 13 63-76	Knob, Handle
9	532 00 04-71	Bolt, Shoulder 5/16-18 x 3/4
10	810 04 05-00	Washer, Lock 5/16
11	873 22 05-00	Nut, Hex 5/16-18
12	873 68 05-00	Nut, Flanged 5/16-18
13	872 14 05-06	Bolt, Carriage 5/16-18 x 3/4 Gr. 5
14	532 12 54-36	Panel, Handle
15	872 11 05-08	Bolt, Carriage 5/16-18 x 1" Gr. 5
16	532 00 26-24	Handle, R.H.

KEY NO.	PART NO.	DESCRIPTION
17	532 10 69-32	Knob, Control, Reverse
18	532 00 30-66	Cable, Control, Tine
19	532 00 26-35	Lever, Control, Tine
20	823 20 04-05	Screw, Set, Socket, Forged, Headless 1/4-20 x 5/16
21	812 00 00-27	Ring, Klip
22	532 10 12-48	Rod, Reverse, Upper
23	532 00 17-78	Pin, Retaining
24	532 00 26-13	Rod, Reverse, Lower
25	734 11 72-01	Washer13/32x13/16x16Ga.
26	876 02 04-12	Pin, Cotter 1/8 x 3/4
27	876 02 03-08	Pin, Cotter 3/32 x 1/2
28	734 11 72-01	Washer 13/32 x 13/16 x 12 Ga.

NOTE: All component dimensions given in U.S. inches.
1 inch = 25.4 mm

REPAIR PARTS FT5

BELT GUARD AND PULLEY ASSEMBLY

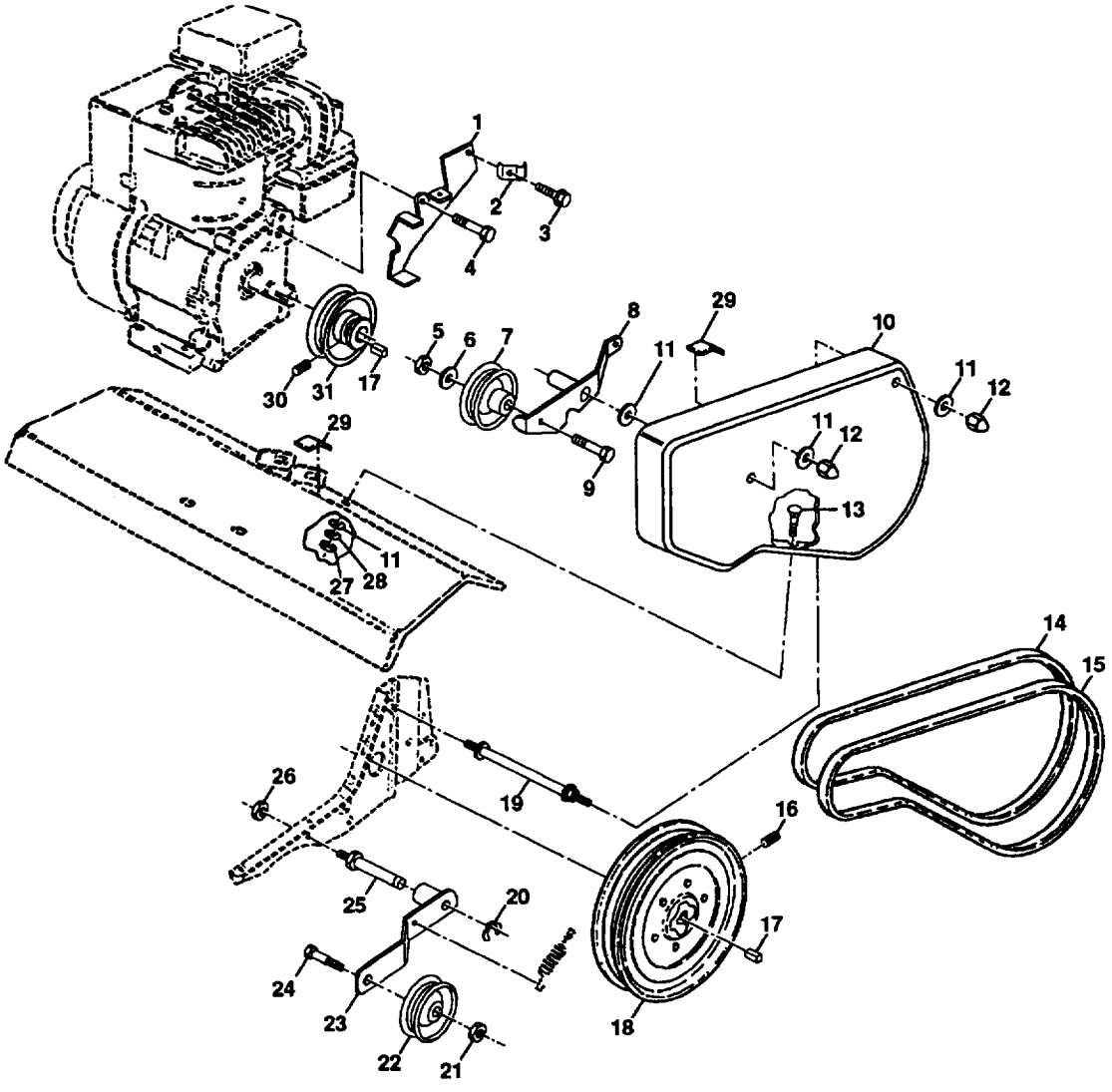

KEY NO.	PART NO.	DESCRIPTION
1	532 12 36-43	Assembly, Bracket, Belt Guard
2	532 00 94-84	Clip, Cable
3	817 02 10-08	Screw, Hex, Washer Hd., Slotted, Thd. Cutting #10-24 x 1/2 Type D
4	874 77 08-12	Bolt, Hex 1/2-20 x 3/4
5	873 22 06-00	Nut, Hex 3/8-16
6	734 11 72-01	Washer13/32x13/16x16Ga.
7	532 00 20-09	Pulley, Idler, Reverse
8	532 12 71-80	Assembly, Arm, Reverse Idler
9	874 78 06-28	Bolt, Hex 3/8-16 x 1-3/4
10	532 12 54-38	Guard, Belt
11	734 11 53-01	Washer9132 x5/8 x16 Ga.
12	532 10 42-13	Nut, Cap 1/4-20
13	872 14 04-05	Boit, Carriage 1/4-20 x 5/8
14	532 12 47-90	V-Belt (Forward Motion)
15	532 00 26-14	V-Belt (Reverse)
16	823 23 05-06	Screw Set,Socket,Headless C.P. 5i16-18 x 3/8
17	532 00 26-49	Key, Square
18	532 00 26-07	Sheave, Transmission
19	532 11 05-50	Bolt, BeltGuard
20	812 00 00-36	Ring, Klip
21	873 22 06-00	Nut, Hex, Jam 3/8-16
22	532 00 91-78	Pulley, Idler
23	532 12 46-88	Arm, Idler
24	874 78 06-20	Bolt,Hex3/8-16x1-1/4
25	532 10 69-68	Shaft, Idler Arm
26	873 22 05-00	Nut, Hex, Jam 5/16-18
27	873 22 04-00	Nut, Fin Hex 1/4-20
28	810 04 04-00	Washer, Lock Hvy, Helical 1/4
29	532 10 92-27	Pad,Idler
30	823 20 04-04	Screw, Set, Socket, Headless C.P. 1/4-20 x 1/4
31	532 10 11-89	Sheave, Engine

NOTE: Allcomponent dimensions giveninU.S.inches.
1 inch = 25.4 mm

REPAIR PARTS FT5

WHEEL AND DEPTH STAKE ASSEMBLY

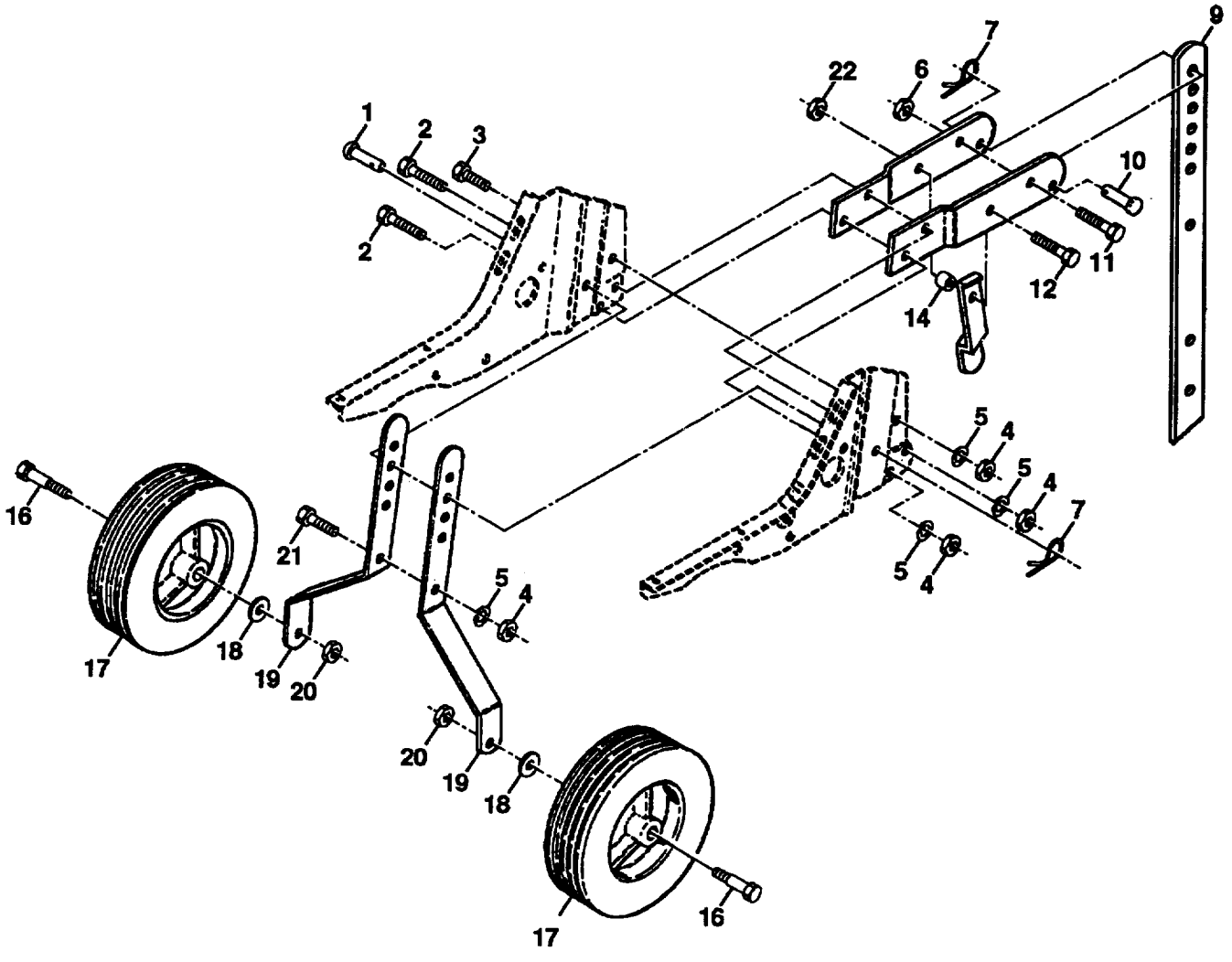

KEY NO.	PART NO.	DESCRIPTION
1	532 00 91-94	Pin, Clevis
2	874 78 05-20	Bolt, Hex5/16-18x 1-1/4
3	874 78 05-12	Bolt, Hex 5/16-18 x 3/4
4	873 22 05-00	N ut, Hex 5/16-18
5	810 04 05-00	Washer, Lock 5/16
6	873 68 06-00	Locknut, w/washer 3/8-16
7	532 00 49-21	Clip, Hairpin
9	532 12 22-33	Stake, Depth
10	532 00 03-26	Pin, Clevis
11	874 78 06-28	Bolt, Hex Fin 3/8-16 x 1-3/4
12	874 78 05-24	Bolt, Hex 5/16-18 x 1-1/2 Gr. 2

KEY NO.	PART NO.	DESCRIPTION
14	532 12 09-58	Washer
16	532 12 11-17	Bolt, Shoulder
17	532 12 78-32	Wheel
18	734 11 72-01	Washer 13/32 x 13/16 x 11 Ga.
19	532 14 92-08	Bracket, Wheei
20	873 68 06-00	Locknut, Crown 3/8-16
21	874 78 05-16	Bolt, Hex 5/16-18 x 1
22	873 80 05-00	Locknut, w/insert 5/16-18

NOTE: All component dimensions given in U.S. inches.
1 inch = 25.4 mm

REPAIR PARTS FT5

TINE ASSEMBLY

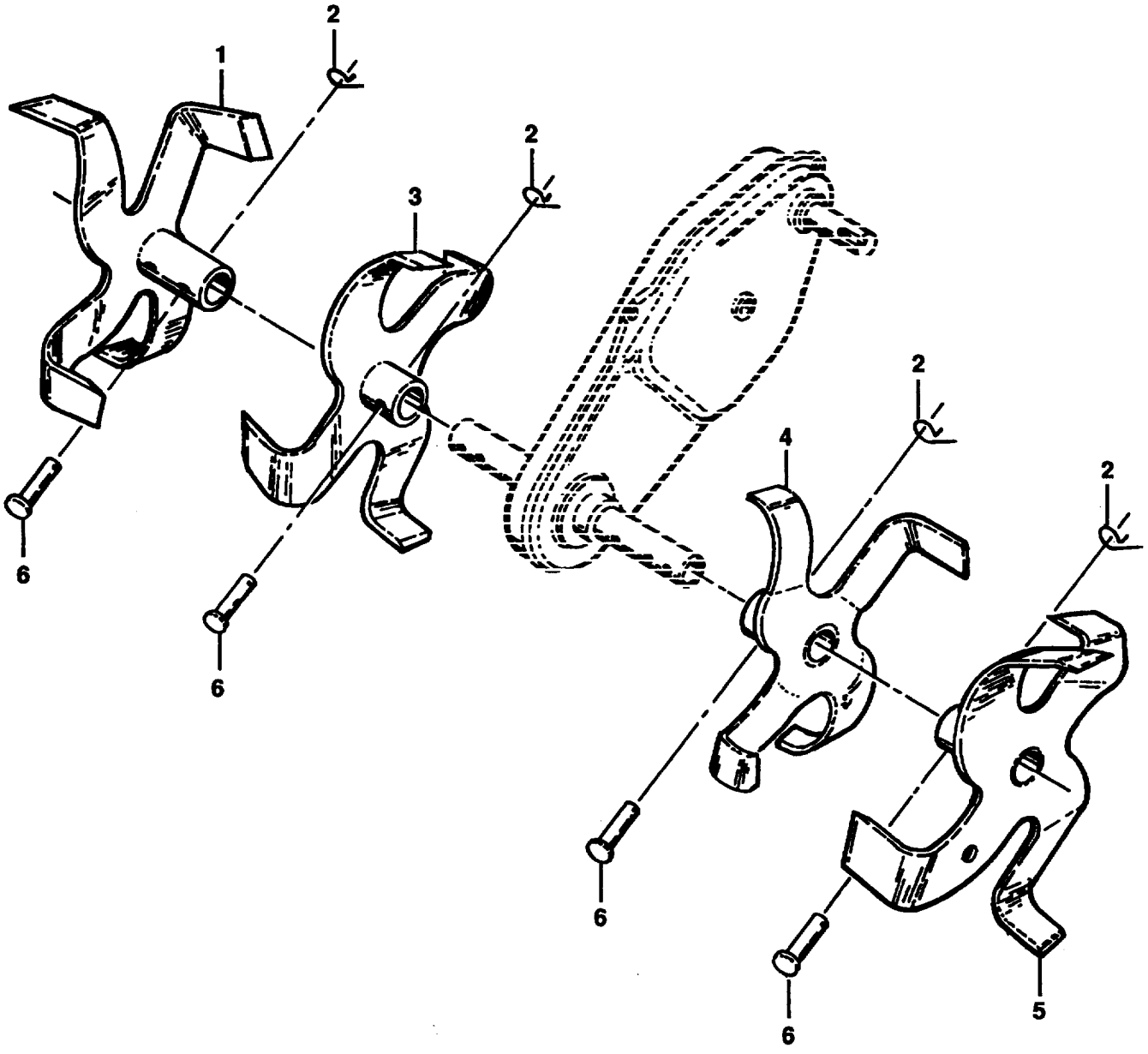

KEY NO.	PART NO.	DESCRIPTION
1	532 10 07-46	Tine, Outer, R.H.
2	532 00 31-46	Clip, Hairpin
3	532 12 46-90	Tine, Inner, R.H.
4	532 12 46-89	Tine, Inner, L.H.
5	532 10 07-44	Tine, Outer, L.H.
6	532 00 49-29	Pin, Clevis

NOTE: All component dimensions given in U.S. inches.
1 inch = 25.4 mm

REPAIR PARTS FT5

TRANSMISSION

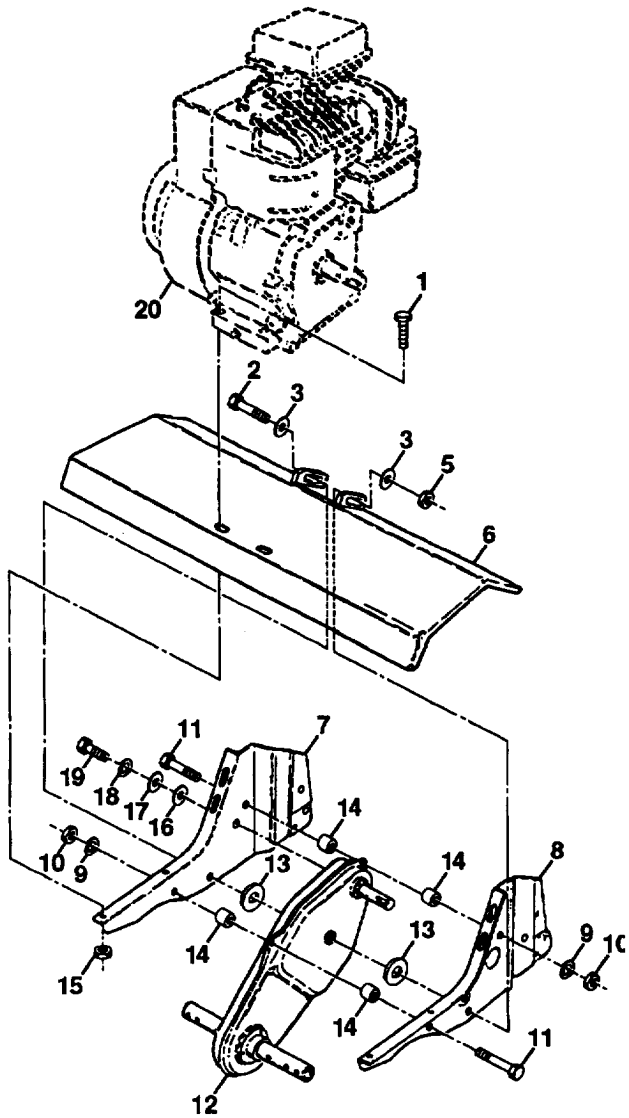

KEY NO.	PART NO.	DESCRIPTION
1	874 78 05-24	Bolt, Hex 5/16-18 x 1-1/2 Gr. 2
2	874 78 06-52	Bolt, Hex Fin 3/8-16 x 3-1/4
3	734 11 72-01	Washer 13/32 x 13/16 x 11
5	873 68 06-00	Locknut, Hex, w/washer 3/8-16
6	532 13 83-43	Shield, Tine
7	532 14 92-07	Bracket, Engine, R.H.
8	532 14 92-06	Bracket, Engine, L. H.
9	810 04 05-00	Washer, Lock 5/16
10	873 22 05-00	N ut, Hex 5/16-18
11	874 78 05-44	Bolt, Hex5/16-18x2-3/4
12	532 12 66-69	Transmission

KEY NO.	PART NO.	DESCRIPTION
13	734 11 78-01	Washer 17/32 x 1 x 16 Ga.
14	532 00 91-73	Spacer, Split
15	873 68 05-00	Nut, Keps 5/16
16	819 09 14-16	Washer 9/32 x 7/8 x 12 Ga.
17	819 09 20-16	Washer 9/32 x 1-1/4 x 16 Ga.
18	810 04 04-00	Washer, Lock 1/4
19	874 61 04-12	Bolt, Hex 1/4-28 x 3/4 Gr. 5
20	- - - - - - - - - -	Engine Model No. 135202

NOTE: All component dimensions given in U.S. inches.
1 inch = 25.4 mm