B45

Tanaka

SUM 500DX

18 novembre 2003

Z249900

B45 01	**SUM-500DX** CYLINDER/PISTON/CRANK SHAFT

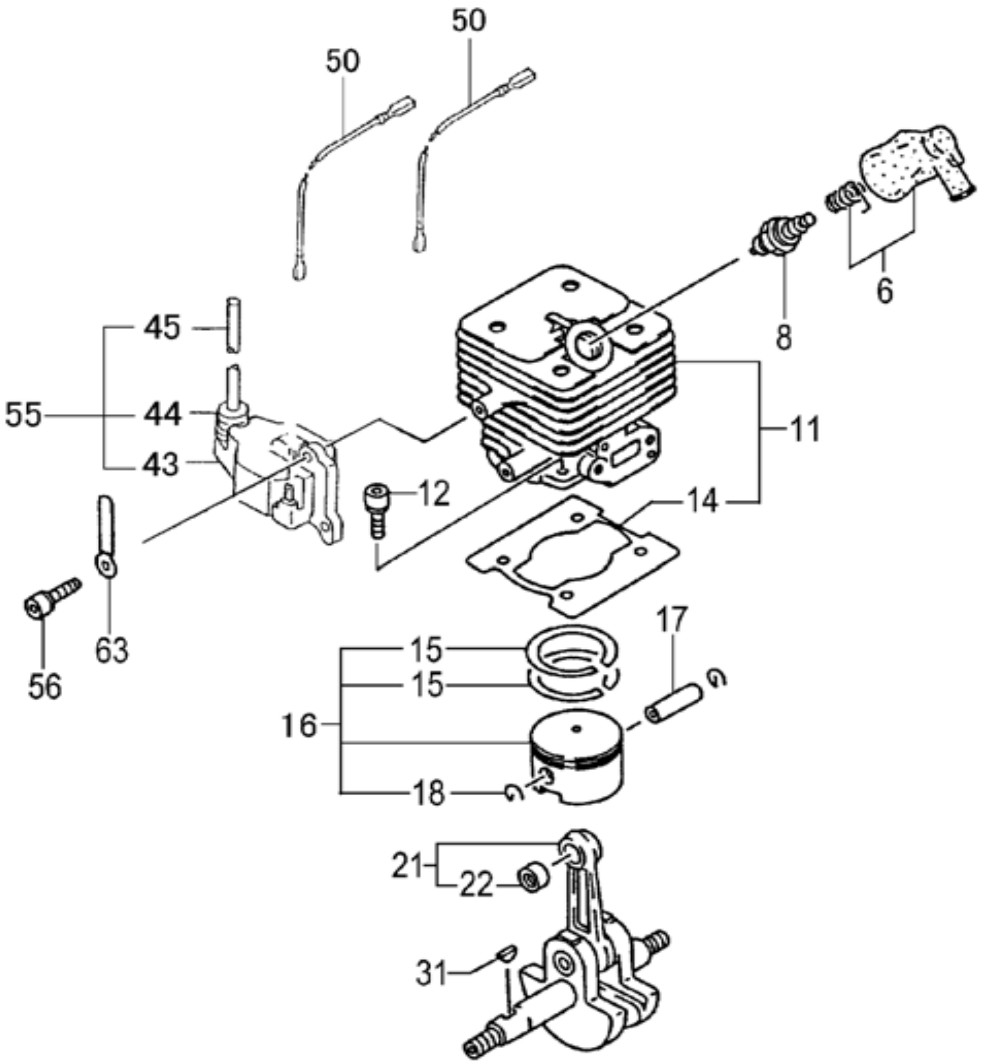

Parts List

Ref.	Part No.	Description	Q'ty	Serial No.
006	157-0097A-90	SPARK PLUG CAP ASS'Y	1	
008	018-06540-21	SPARK PLUG BPMR6A	1	
011	001-04300-90	CYLINDER SET, SPARE	1	
012	994-61050-204	HEX. HOLE BOLT 5X20/S	4	
014	017-0430A-20	CYLINDER GASKET	1	
015	041-04050-20	PISTON RING	2	
016	030-0423Z-90	PISTON SET, SPARE	1	
017	037-01000-20	PISTON PIN 10X30	1	
018	039-05004-20	PISTON PIN CIRCLIP	2	
021	046-04300-80	CRANK SHAFT COMP.	1	
022	999-62101-004	NEEDLE BRG F1010B 1.4X8.6	1	
031	068-02000-20	WOOD-RUFF KEY 3X13X5	1	
043	167-20543-80	IGNITION COIL COMP.	1	
044	560-20517-20	RUBBER CAP	1	
045	178-20543-22	HIGHT TENSION CORD	1	
050	178-04304-80	SPECIAL CORD B190M	2	
055	167-20543-91	IGNITION COIL ASS'Y	1	
056	994-64040-184	HEX. HOLE BOLT 4X18WS	2	
063	198-11600-80	CORD CLAMP COMP.	1	

B45 02	**SUM-500DX** CRANK CASE

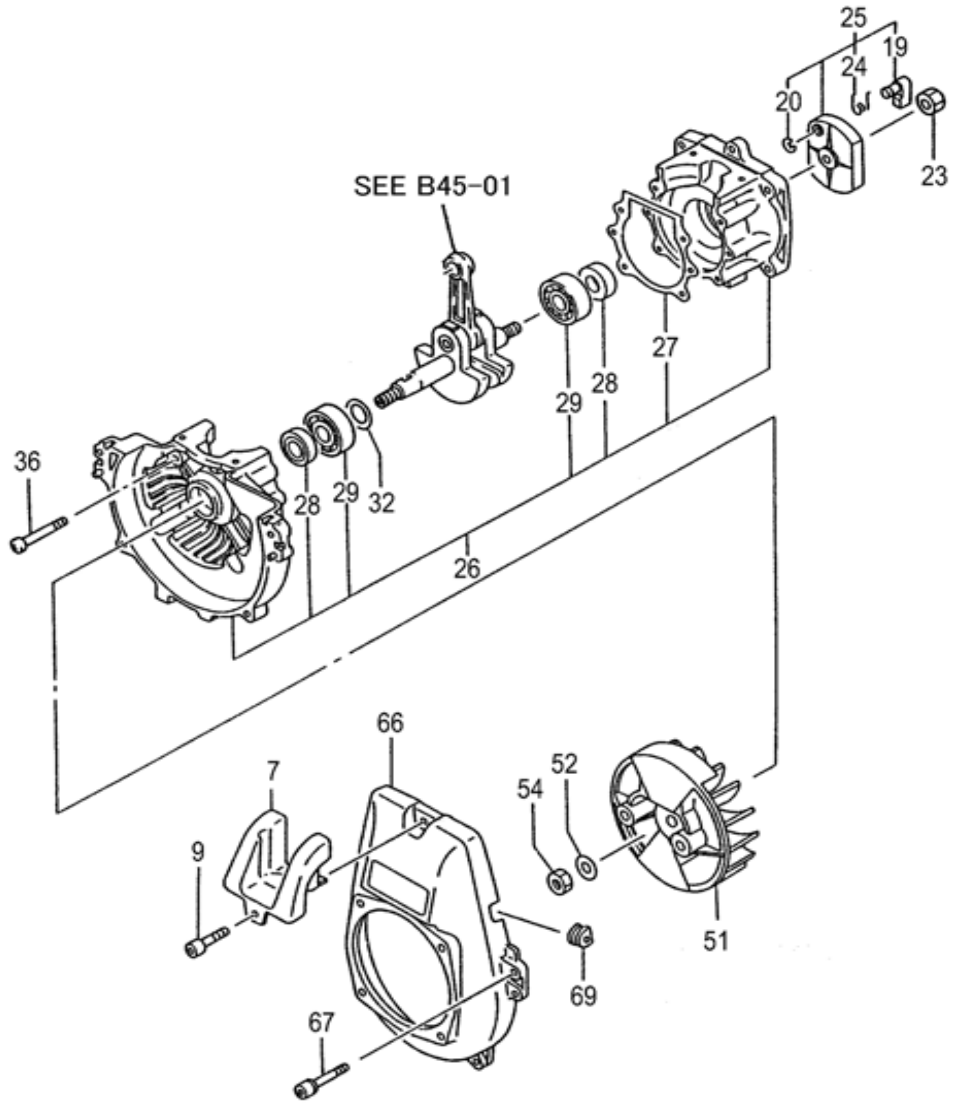

Parts List				
Ref.	Part No.	Description	Q'ty	Serial No.
007	257-04300-20	SPARK PLUG COVER	1	
009	994-63050-204	HEX.HOLE BOLT 5X20PS	1	
019	788-0162V-20	STARTER PAWL	1	
020	993-55050-000	STOP RING E-5	1	
023	991-11100-013	SMALL NUT 10	1	
024	790-0162V-20	STARTER PAWL SPRING	1	
025	798-04220-90	STARTER PULLEY	1	
026	072-04300-90	CRANK CASE ASS'Y	1	
027	090-04300-20	CRANK CASE GASKET	1	
028	999-66152-564	OIL SEAL UD15257	2	
029	999-61620-200	BALL BEARING #6202, 35MM/OD	2	
032	071-02007-20	CRANK SHAFT SHIM 0.05	V	
032	071-02007-21	CRANK SHAFT SHIM 0.10	V	
032	071-02007-22	CRANK SHAFT SHIM 0.15	V	
032	071-02007-23	CRANK SHAFT SHIM 0.20	V	
032	071-02007-24	CRANK SHAFT SHIM 0.30	V	
036	994-61050-304	HEX. HOLE BOLT 5X30S	4	
051	155-20538-80	MAGNETO ROTOR COMP.	1	
052	992-01100-011	WASHER 10	1	
054	991-11100-011	NUT 10	1	
066	112-04400-21	FAN CASE	1	
067	994-61050-204	HEX. HOLE BOLT 5X20/S	2	
069	203-11660-20	PRIMARY CORD GROMMET	1	

B45 03	**SUM-500DX** ENGINE-1

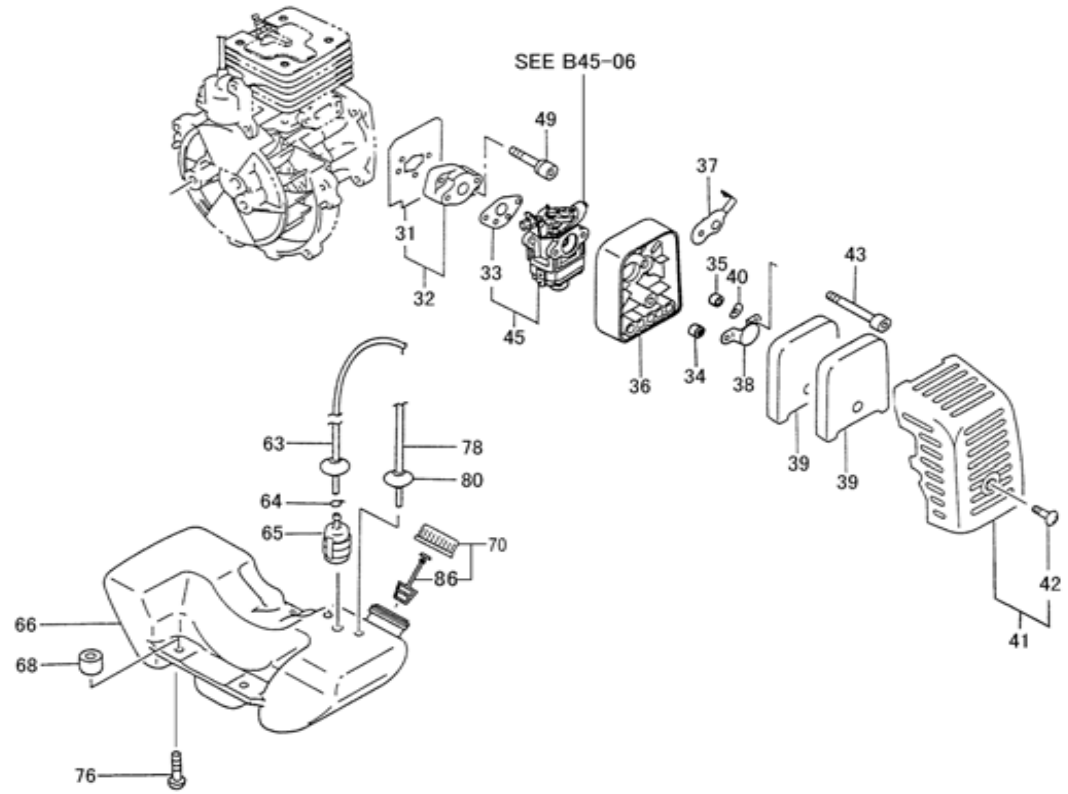

Parts List				
Ref.	Part No.	Description	Q'ty	Serial No.
031	403-04300-20	INLET MANIFOLD GASKET	1	
032	404-04300-90	CARB.INSULATOR SET, SPARE	1	
033	402-04300-20	CARBURETOR GASKET	1	
034	453-0637C-20	COLLAR	1	
035	470-01380-20	COLLAR	1	
036	423-01380-82	CLEANER BODY COMP	1	
037	528-01380-21	CHOKE VALVE	1	
038	476-01700-20	BLOW OVER CHECK BOARD	1	
039	446-01380-20	CLEANER SPONGE	1	
039	446-01380-21	CLEANER ELEMENT 6T	2	
040	992-04080-031	WAVE WASHER 8	1	
041	452-01380-91	CLEANER COVER ASS'Y	1	
042	380-0637C-20	SPECIAL SCREW	1	
043	994-14050-571	SCREW 5X57/S	2	
045	455-04300-90	CARBURETOR SET WYJ168	1	
049	994-64050-254	HEX. HOLE BOLT 5X25WS	2	
063	223-01251-90	FUEL PIPE ASS'Y 3X5X230	1	
064	680-00731-20	CLIP, 6.3 DIA.	1	
065	675-01630-90	PUMP FILTER BODY ASS'Y	1	
066	591-0430A-21	FUEL TANK, VERMILION	1	
068	659-00801-20	COLLAR 5.8	3	
070	595-00093-90	TANK CAP D ASS'Y.ORANGE	1	
076	994-63050-185	HEX. HOLE BOLT 5X18PS	2	
078	700-03005-08	FUEL PIPE 3X5X85	1	
080	222-06300-20	FUEL PIPE GROMMET	1	
086	626-32550-20	TANK CAP CHAIN	1	

B45 04	SUM-500DX ENGINE-2

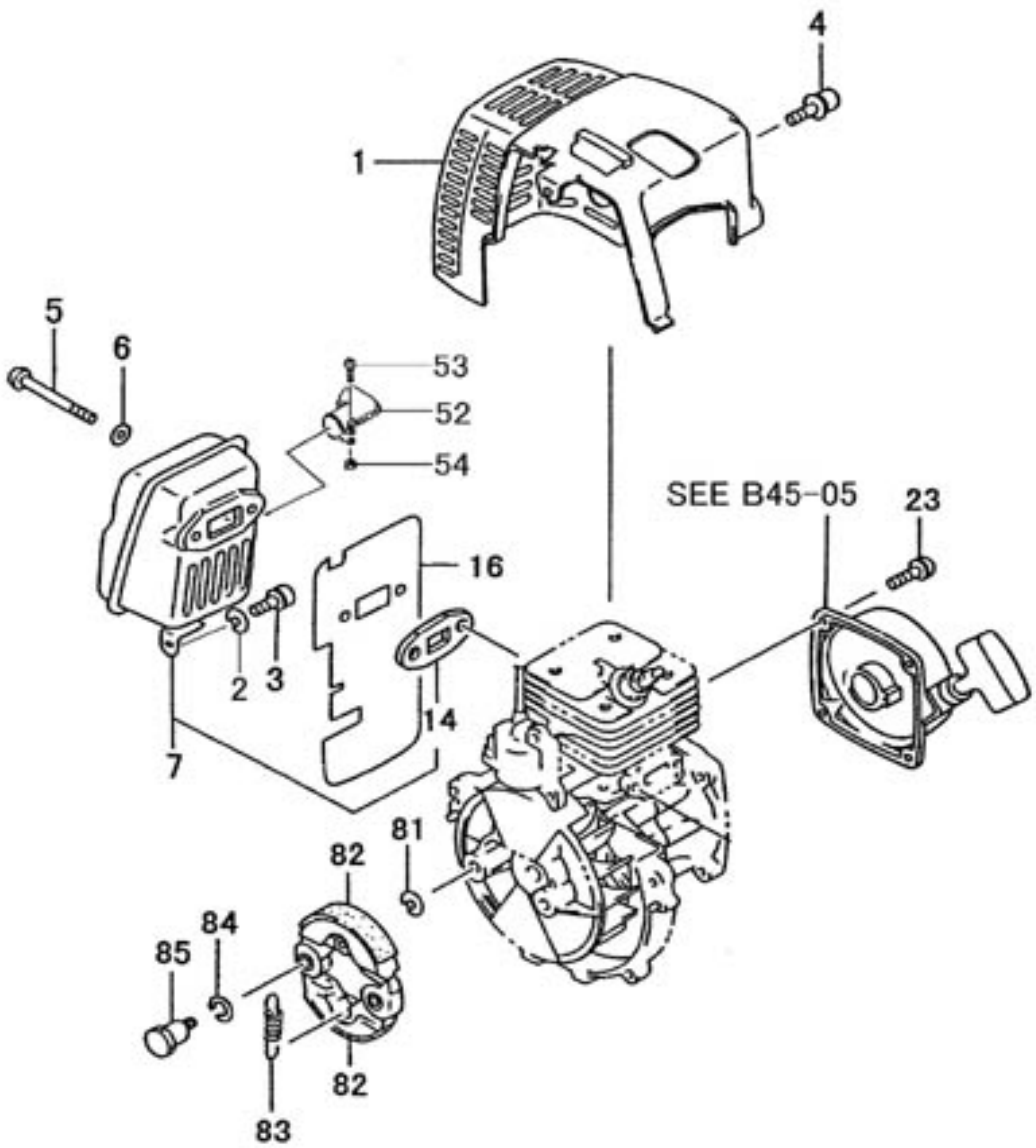

Parts List				
Ref.	Part No.	Description	Q'ty	Serial No.
001	738-04300-20	MUFFLER PROTECTOR	1	
002	992-01060-011	WASHER 6	1	
003	994-61050-124	HEX. HOLE BOLT 5X12S	1	
004	994-64050-154	HEX. HOLE BOLT 5X15WS	1	
005	990-53060-653	HEX. HOLE BUTTON SCREW 6X65	2	
006	992-01060-011	WASHER 6	2	
007	704-04330-90	MUFFLER SET	1	
014	737-04230-20	MUFFLER GASKET	1	
016	133-04300-20	HEAT SHIELD	1	
023	994-63050-204	HEX.HOLE BOLT 5X20PS	2	
052	708-01028-80	TAIL PIPE COMP.	1	
053	990-11040-121	SCREW 4X12	1	
054	991-01040-011	HEX. NUT 4	1	
081	359-10112-20	CLUTCH WASHER B	2	
082	290-04200-81	CLUTCH ARM COMP.	2	
083	342-04200-20	CLUTCH SPRING	1	
084	992-04100-030	WAVE WASHER 10	2	
085	357-04201-20	CLUTCH STEP BOLT	2	

B45 05	**SUM-500DX** RECOIL STARTER

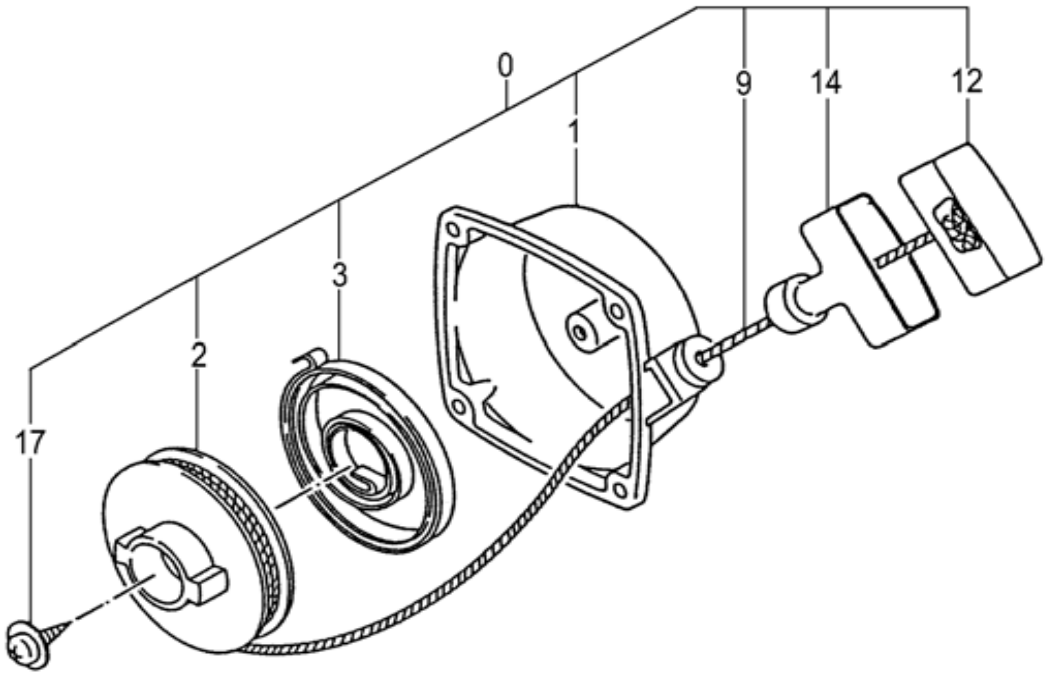

Parts List				
Ref.	Part No.	Description	Q'ty	Serial No.
000	762-04220-90	RECOIL STARTER BODY ASS'Y	1	
001	772-04220-80	RECOIL STARTER BODY COMP.	1	
002	769-04220-20	STARTER ROPE REEL	1	
003	779-04220-20	RECOIL SPRING	1	
009	783-04270-20	STARTER ROPE	1	
012	835-04220-20	STARTER HANDLE CAP	1	
014	785-04220-20	STARTER HANDLE	1	
017	839-04220-20	SET SCREW	1	

B45 06	**SUM-500DX** CARBURETOR

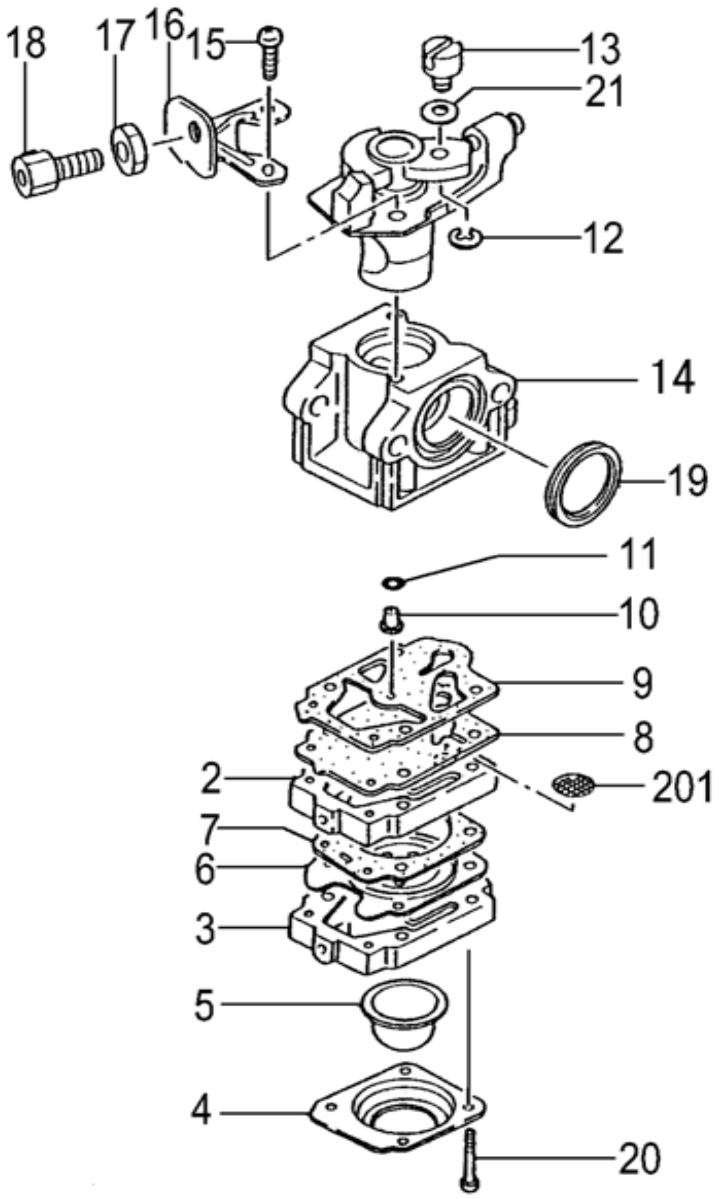

Parts List				
Ref.	Part No.	Description	Q'ty	Serial No.
002	575-25153-80	PUMP BODY COMP	1	
003	442-25151-80	PRIMING PUMP COMP.	1	
004	476-25151-20	DIAPHRAGM COVER	1	
005	447-25108-20	PRIMING BODY	1	
006	474-25001-80	METERING DIAPHRAGM COMP.	1	
007	475-25153-20	DIAPHRAGM GASKET	1	
008	576-25100-20	PUMP DIAPHRAGM	1	
009	577-25100-20	PUMP GASKET	1	
010	599-2000W-51	MAIN JET #51	1	
011	550-25100-20	O-RING	1	
012	489-25100-20	STOP RING	1	
013	539-25120-20	SWIVEL	1	
014	488-25183-80	THROTTLE VALVE COMP.	1	
015	514-25100-20	THROTTLE SET SCREW	2	
016	544-25164-20	CABLE ADJUSTER STAY	1	
017	613-25100-20	CABLE ADJUST NUT	1	
018	614-25137-20	CABLE ADJUSTER	1	
019	431-0634C-20	CLEANER PACKING	1	
020	548-25151-20	SET SCREW	4	
021	549-25165-20	THRUST WASHER	1	
201	578-25007-20	INLET SCREEN	1	

B45 07	**SUM-500DX** SHOULDER FRAME

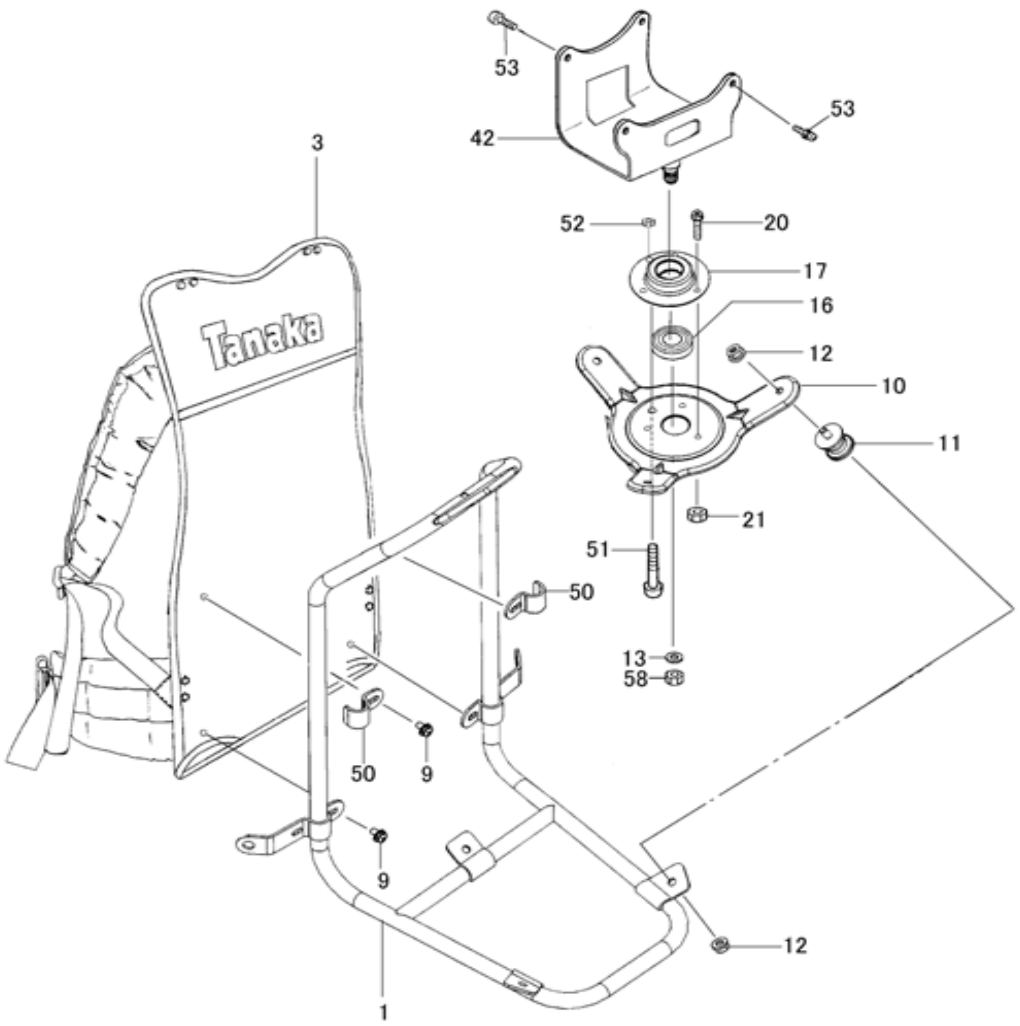

Parts List

Ref.	Part No.	Description	Q'ty	Serial No.
001	244-38011-80	SHOULDER FRAME COMP	1	
003	746-38011-90	SHOULDER BELT ASSY	1	
009	994-15050-101	SCREW 5X10/PS	4	
010	221-38010-20	ENGINE BASE	1	
011	319-33390-80	CUSHION RUBBER COMP.	3	
012	991-82060-001	FLANGE NUT 6	6	
013	992-01080-011	WASHER 8	1	
016	999-61620-201	BALL BEARING #6202ZZ, 35MM/OD	1	
017	382-38010-20	BEARING HOLDER	1	
020	994-24050-101	BOLT 5X10	3	
021	991-01050-011	HEX. NUT 5	3	
042	220-38010-80	ENGINE BASE COMP.	1	
050	248-3338E-20	SHOULDER PLATE HOLDER B.	2	
051	994-25060-251	BOLT 6X25	1	
052	991-82060-001	FLANGE NUT 6	1	
053	994-61050-204	HEX. HOLE BOLT 5X20/S	4	
058	991-78080-010	NYLON LOCK NUT 8	1	

B45 08	**SUM-500DX** CLUTCH CASE

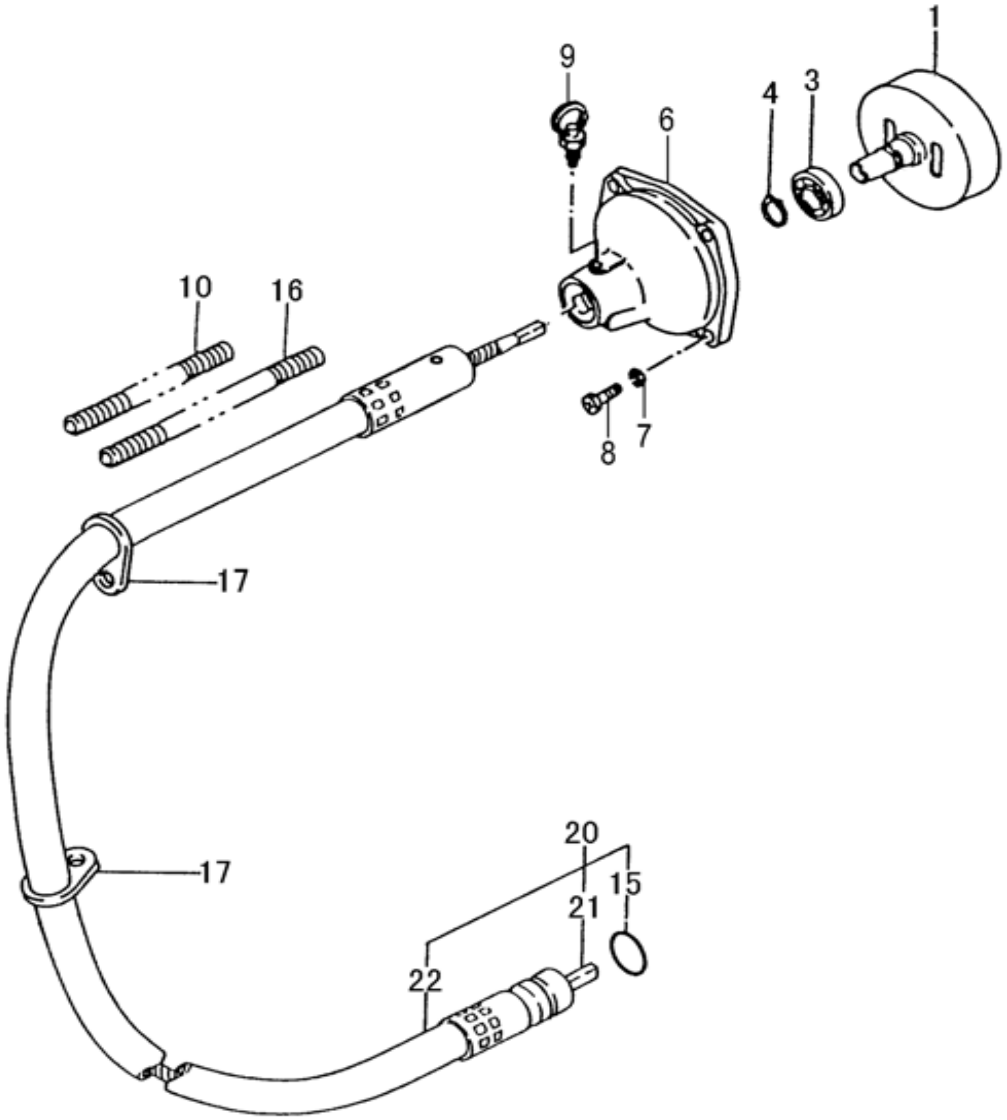

Parts List

Ref.	Part No.	Description	Q'ty	Serial No.
001	332-33340-80	CLUTCH DRUM COMP.	1	
003	999-61620-201	BALL BEARING #6202ZZ, 35MM/OD	1	
004	993-50015-002	STOP RING C-15, OUTER	1	
006	331-33380-20	CLUTCH CASE	1	
007	992-10060-062	S.WASHER 6	4	
008	990-53060-203	HEX HOLE BUTTON SCREW 6X20	4	
009	400-33365-81	LOCK PIN COMP.	1	
010	164-10070-00	PROTECTION TUBE 10X700L	1	
015	999-67018-000	O-RING P-18	1	
016	164-13010-01	PROTECTION TUBE, 13X100L	1	
017	198-33386-20	CORD CLAMP	2	
020	351-3338F-91	FLEXIBLE SHAFT ASS'Y	1	
021	351-3338F-80	FLEXIBLE SHAFT COMP.	1	
022	350-33390-81	FLEXIBLE LINNER COMP.,880L	1	

B45 09	**SUM-500DX** OPERATION PIPE

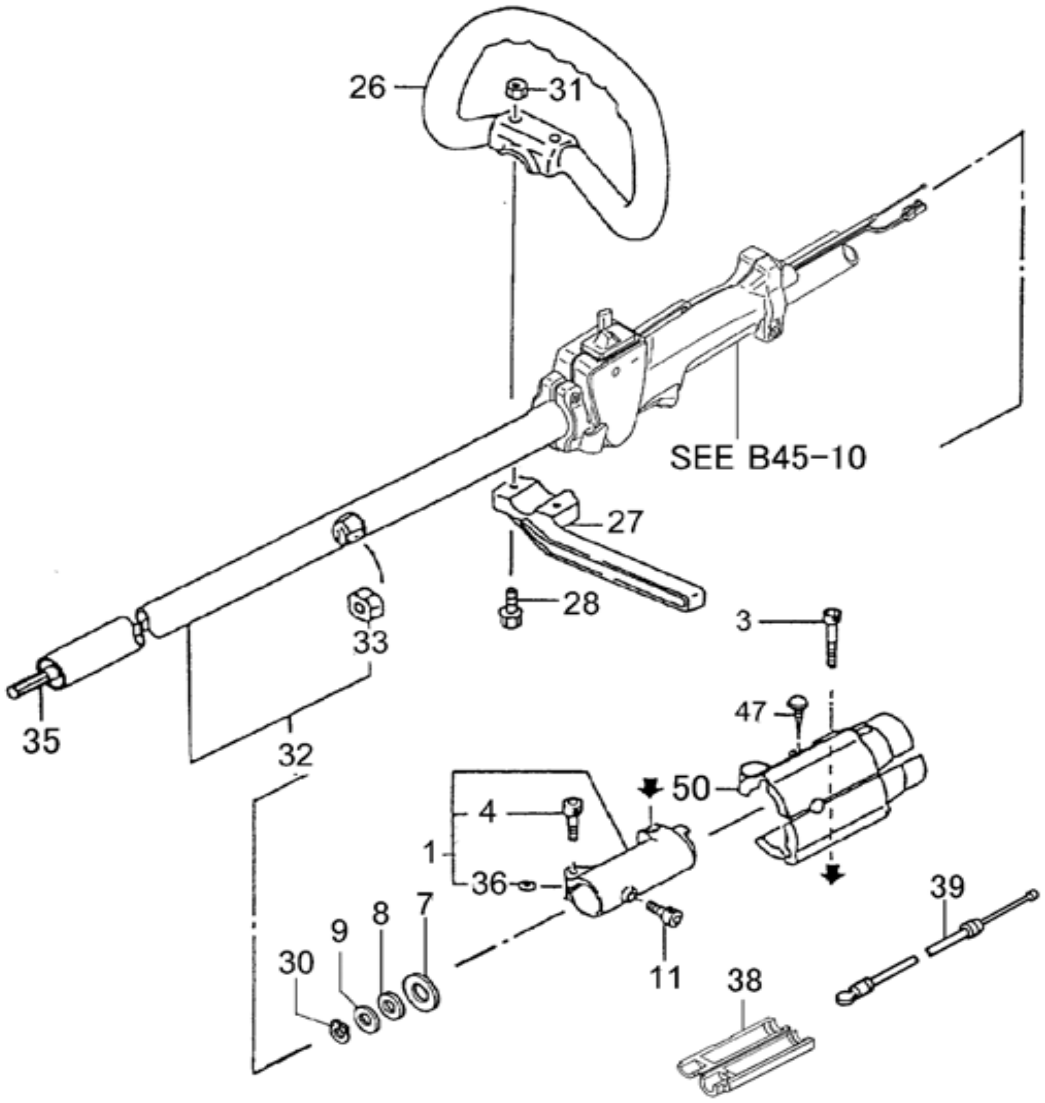

Parts List

Ref.	Part No.	Description	Q'ty	Serial No.
001	281-33398-90	JOINT PIPE ASS'Y	1	
003	994-61050-254	HEX. HOLE BOLT 5X25/S	1	
004	994-61050-224	HEX. HOLE BOLT 5X22/S	1	
007	320-33315-20	SPACER	1	
008	360-33315-20	SPACER	1	
009	358-10112-20	CLUTCH WASHER A	1	
011	990-51050-103	HEX. HOLE BOLT 5X10	1	
026	500-33560-20	HANDLE	1	
027	520-33398-20	BARRIER, 26DIA, BLACK	1	
028	994-23060-432	BOLT 6X43/P	2	
030	993-50010-002	STOP RING C-10, OUTER	1	
031	991-01060-041	HEX. NUT 6	2	
032	341-33398-80	DRIVE SHAFT PIPE COMP.	1	
033	347-33411-91	BUSHING ASS'Y	4	
035	343-33398-20	DRIVE SHAFT, 1507L	1	
036	708-32350-20	CHOKE VALVE SHIM	1	
038	888-06563-20	CONNECTOR CASE	1	
039	885-0633P-80	THROTTLE WIRE	1	
047	990-72045-204	TAPPING SCREW 4.5X20	1	
050	285-33386-21	JOINT COVER	1	

B45 10	**SUM-500DX** THROTTLE LEVER

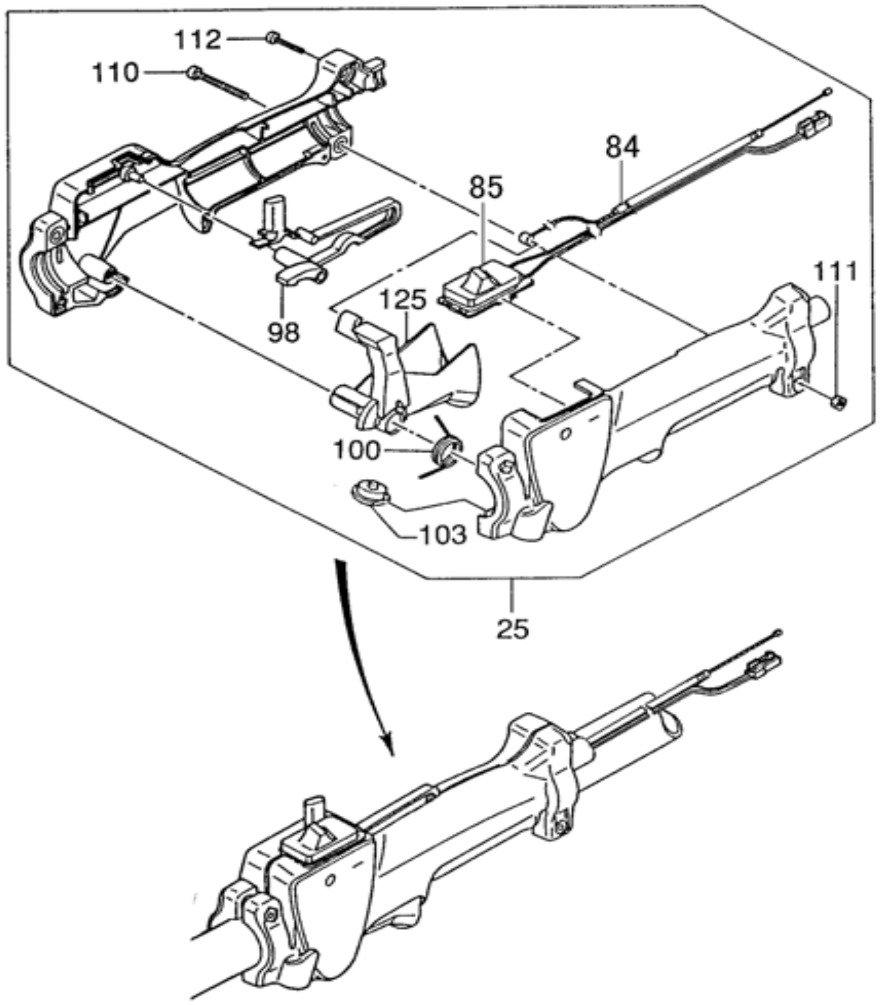

Parts List				
Ref.	Part No.	Description	Q'ty	Serial No.
025	870-38010-90	THROTTLE LEVER ASSY 26	1	
084	887-38010-80	THROTTLE WIRE	1	
085	156-38010-80	STOP SWITCH	1	
098	253-38400-20	SAFETY LEVER	1	
100	832-07038-20	RETURN SPRING	1	
103	322-38400-20	BLIND PLUG	1	
110	994-31050-203	SCREW 5X20	2	
111	991-01050-043	CONTAL NUT 5	2	
112	993-46040-202	SCREW 4X20, BLACK	4	
125	880-38400-20	THROTTLE LEVER	1	

B45 11	**SUM-500DX** GEAR CASE/GUARD

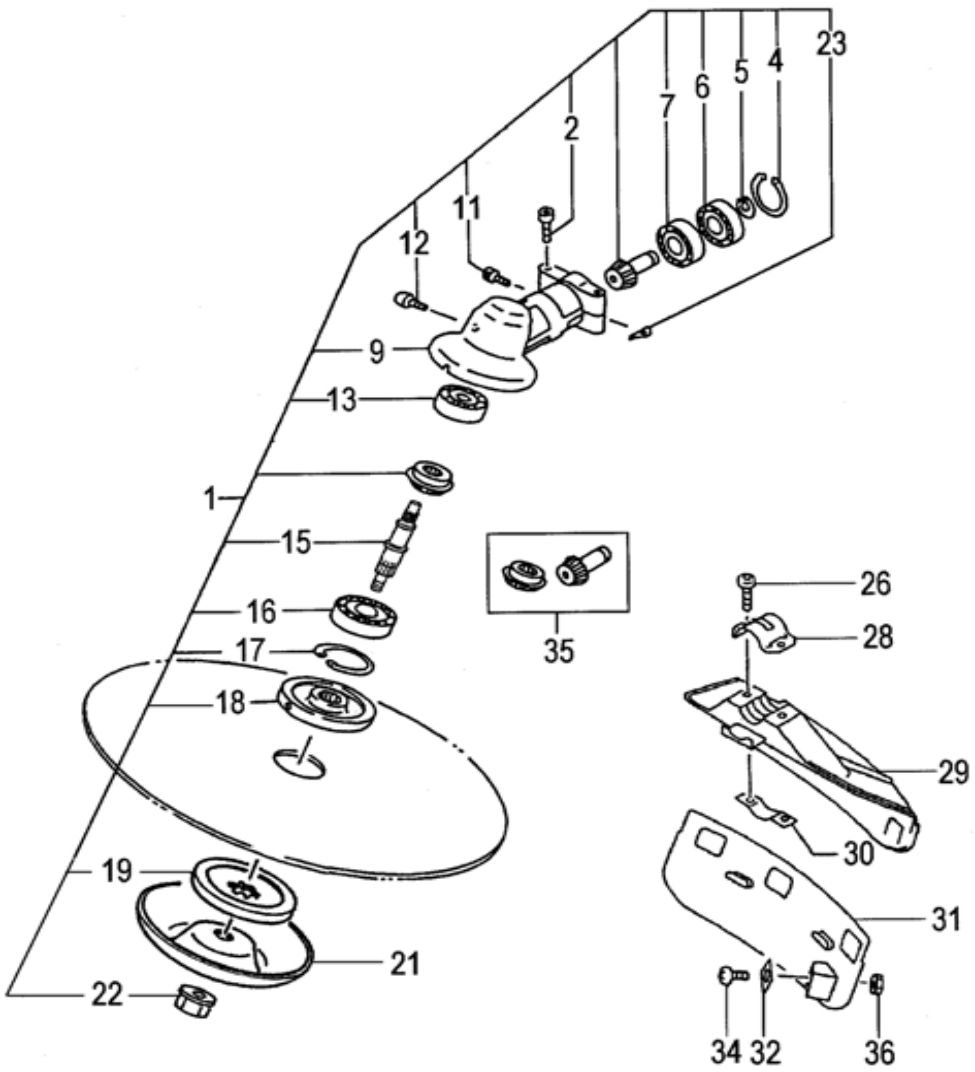

Parts List

Ref.	Part No.	Description	Q'ty	Serial No.
001	300-3338R-90	GEAR CASE ASS'Y,26 DIA.	1	
002	994-61050-254	HEX. HOLE BOLT 5X25/S	2	
004	993-51026-002	STOP RING C-26, INNER	1	
005	993-57010-002	STOP RING OUTER 10	1	
006	999-61600-002	BALL BEARING #6000Z, 26MM/OD	1	
007	999-61600-000	BALL BEARING #6000, 26MM/OD	1	
009	300-37480-20	GEAR CASE 26 DIA	1	
011	994-61050-124	HEX. HOLE BOLT 5X12S	1	
012	316-38150-20	OILING BOLT	1	
013	999-61609-000	BALL BEARING 609	1	
015	304-3338R-20	GEAR SHAFT	1	
016	999-61620-103	BALL BEARING 6201D, 32MM/OD	1	
017	993-51032-002	STOP RING C-32, INNER	1	
018	310-38150-20	CUTTER HOLDER	1	
019	311-38150-20	CUTTER HOLDER	1	
021	308-38150-20	PROTECTION COVER B	1	
022	313-38150-20	FIXING NUT M10X1.25	1	
023	324-38150-20	GEAR CASE WASHER	1	
026	994-81060-254	HEX. HOLE BUTTON SCREW 6X25S	2	
028	442-33699-20	COVER BRACKET, 26 DIA.	1	
029	441-37380-20	SAFETY COVER, CE	1	
030	445-37380-20	SAFETY COVER HOLDER	1	
031	447-37380-20	COVER GUARD	1	
032	797-37380-21	KNIFE	1	
034	994-14050-121	SCREW 5X12/S	1	
035	301-37480-00	GEAR/PINION SET, SPARE	1	
036	991-01050-011	HEX. NUT 5	1	

B45 12	**SUM-500DX** TOOLS

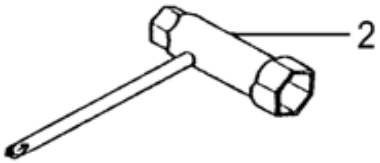

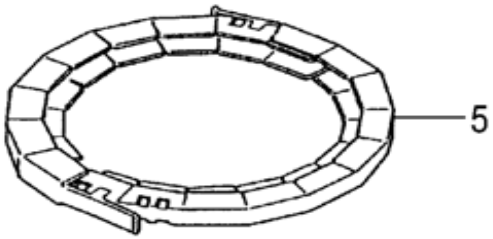

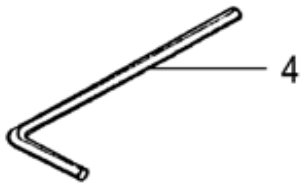

Parts List				
Ref.	Part No.	Description	Q'ty	Serial No.
002	826-20000-80	COMBI, BOX WRENCH 17X19	1	
004	813-20000-20	HEX. WRENCH 4	1	
005	615-37224-20	CUTTER COVER	2	