H37

Tanaka

THT 210TS

14 novembre 2003

H37 01	**THT-210TS** CYLINDER/PISTON/CRANK SHAFT

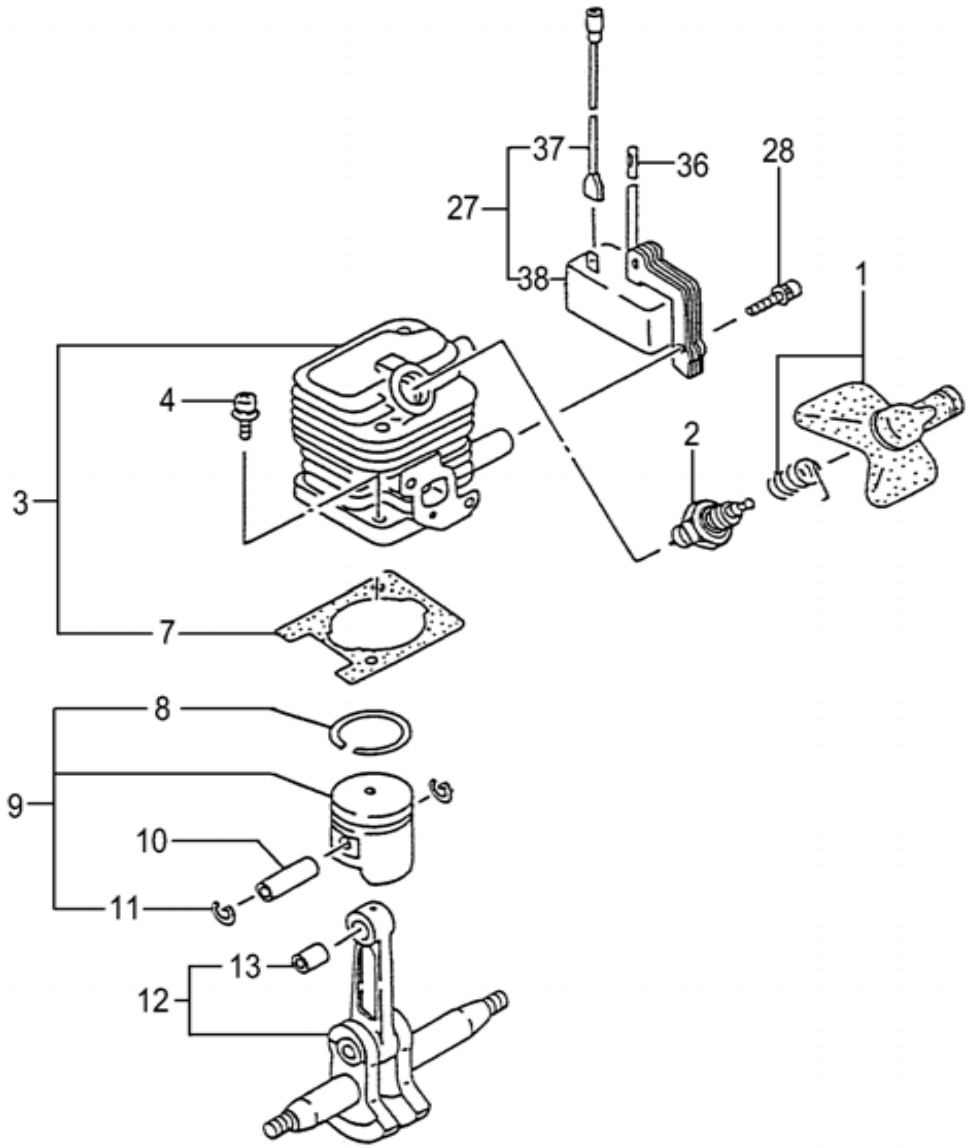

Parts List

Ref.	Part No.	Description	Q'ty	Serial No.
001	157-06500-91	SPARK PLUG CAP ASS'Y	1	
002	018-00555-20	SPARK PLUG, RCJ8Y	1	
003	001-0650A-90	CYLINDER SET	1	
004	994-16050-201	SCREW 5X20/WS	2	
007	017-06500-20	CYLINDER GASKET	1	
008	041-00601-21	PISTON RING	1	
009	030-0650A-90	PISTON SET	1	
010	037-06500-20	PISTON PIN	1	
011	039-01620-20	PISTON PIN CIRCLIP	2	
012	046-06500-80	CRANK SHAFT COMP.	1	
013	999-62081-225	NEEDLE BRG F-810 1.4X8.5	1	
027	153-21532-90	IGNITION COIL ASS'Y	1	
028	994-16040-186	HIGH TENSION SCREW 4X18WS	2	
036	250-06500-20	INSULATOR TUBE, 50L	1	
037	178-06500-80	CORD	1	
038	167-21532-80	IGNITION COIL COMP.	1	

H37 02	**THT-210TS** CRANK CASE

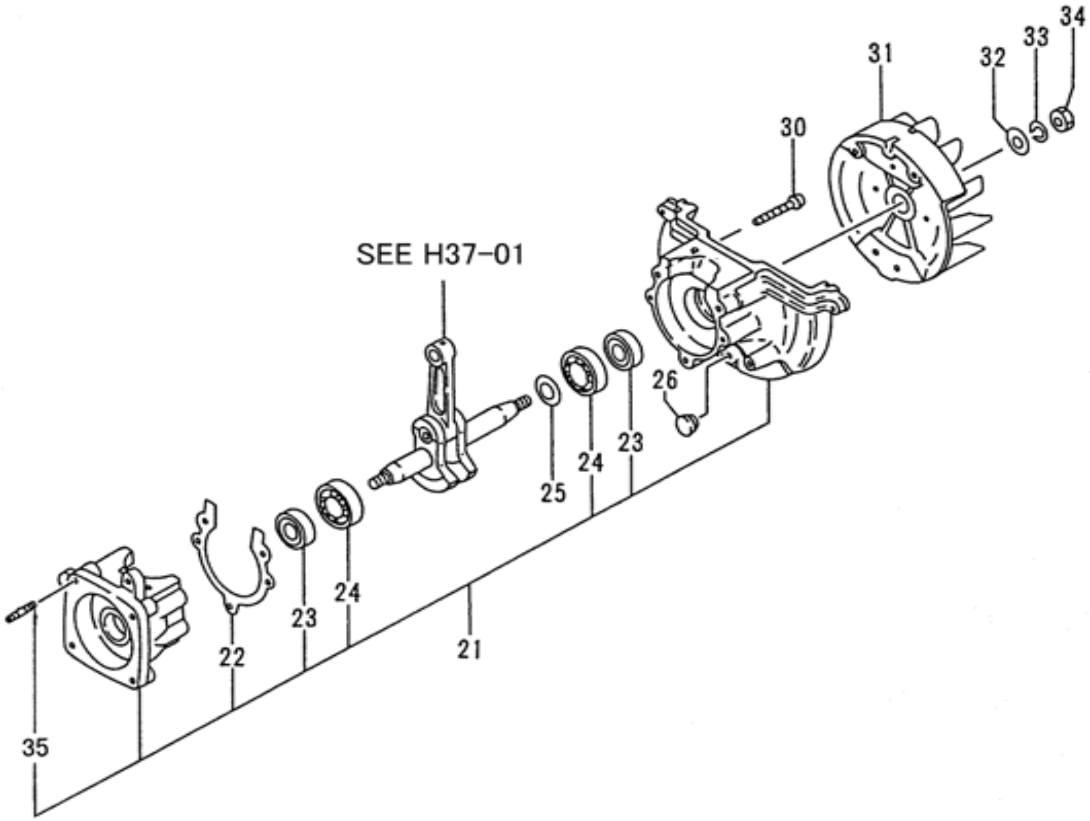

Parts List

Ref.	Part No.	Description	Q'ty	Serial No.
021	072-06500-90	CRANK CASE ASS'Y	1	
022	090-06500-20	CRANKCASE GASKET	1	
023	999-66122-200	OIL SEAL TB 12227	2	
024	999-61600-115	BALL BEARING 6001 C3	2	
025	330-00200-21	GEAR SHAFT SHIM 0.10	V	
025	330-00200-22	GEAR SHAFT SHIM 0.15	V	
025	330-00200-23	GEAR SHAFT SHIM 0.20	V	
025	330-00200-24	GEAR SHAFT SHIM 0.30	V	
026	599-00601-20	GROMMET	1	
030	994-14050-301	SCREW 5X30/S	3	
031	155-21523-80	MAGNETO ROTOR COMP.	1	
032	992-01080-011	WASHER 8	1	
033	992-10080-012	S.WASHER 8	1	
034	991-01080-011	HEX. NUT 8	1	
035	100-02100-20	STUD BOLT 6X22	2	

H37 03	**THT-210TS** ENGINE-1

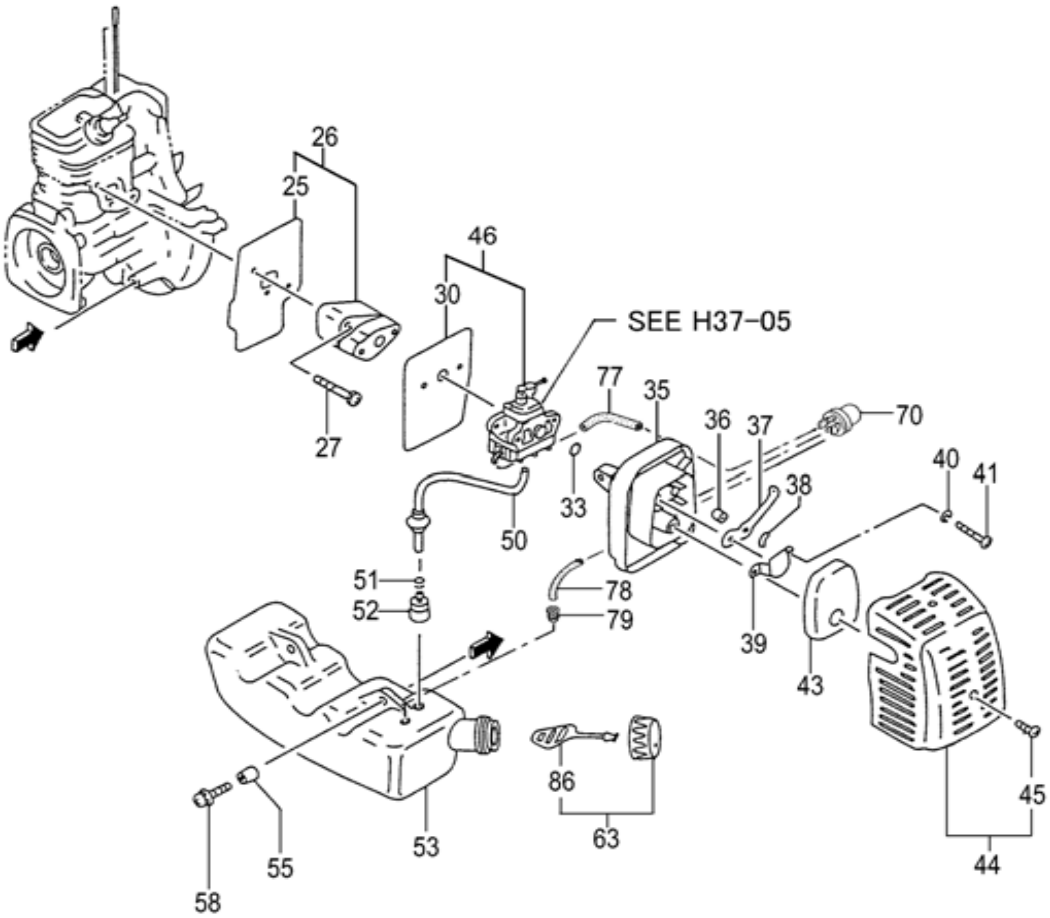

Parts List

Ref.	Part No.	Description	Q'ty	Serial No.
025	403-06500-20	INTAKE PIPE GASKET	1	
026	404-06500-90	CARB. INSULATOR SET,SPARE	1	
027	994-16050-252	SCREW 5X25WS	2	
030	402-06500-20	CARBURETOR GASKET	1	
033	999-67015-000	O-RING P-15	1	
035	423-06500-81	CLEANER BODY COMP.	1	
036	470-06500-20	COLLAR 7.5	2	
037	528-06500-20	CHOKE VALVE	1	
038	992-04080-031	WAVE WASHER 8	1	
039	476-01700-20	BLOW OVER CHECK BOARD	1	
040	992-10050-012	S.WASHER 5	2	
041	990-11050-602	SCREW 5X60	2	
043	446-06500-21	CLEANER SPONGE	1	
044	452-06500-91	CLEANER COVER ASS'Y	1	
045	380-0637C-20	SPECIAL SCREW	1	
046	455-06504-90	CARBRETOR SET WYL112	1	
050	223-06500-90	FUEL PIPE ASS'Y L=130	1	
051	680-00731-20	CLIP, 6.3 DIA.	1	
052	675-04042-80	PUMP FILTER BODY COMP.	1	
053	591-06504-21	TANK	1	
055	659-00801-20	COLLAR 5.8	2	
058	994-63050-185	HEX. HOLE BOLT 5X18PS	2	
063	595-00093-90	TANK CAP D ASS'Y.ORANGE	1	
070	442-25143-80	PRIMING PUMP COMP.	1	
077	700-02504-08	FUEL PIPE 2.5X4X80	1	
078	700-02504-06	FUEL PIPE 2.5X4X65	1	
079	534-32710-20	RETURN GROMMET	1	
086	626-32550-20	TANK CAP CHAIN	1	

H37 04	**THT-210TS** ENGINE-2

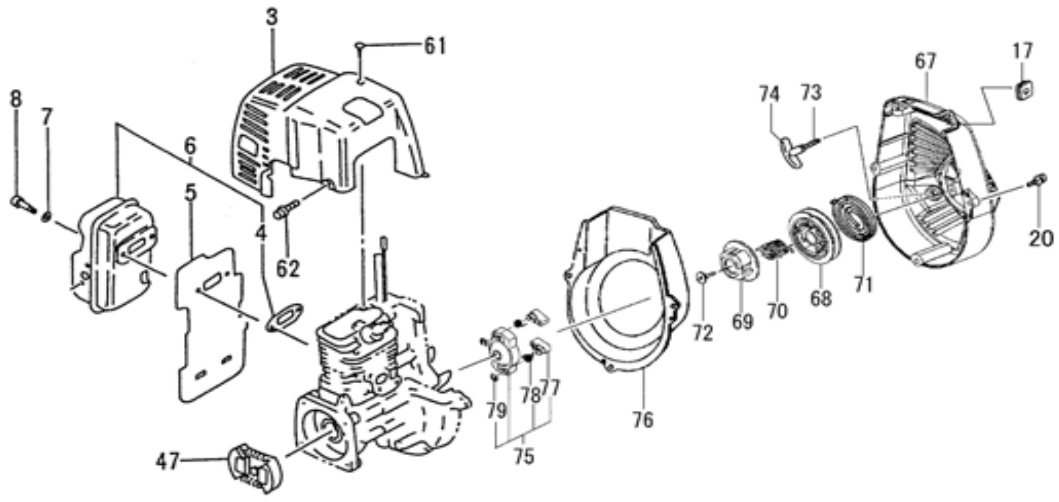

Parts List

Ref.	Part No.	Description	Q'ty	Serial No.
003	738-06500-20	MUFFLER PROTECTOR	1	
004	737-06500-20	MUFFLER GASKET	1	
005	133-06500-20	HEAT SHIELD	1	
006	704-06504-91	MUFFLER SET	1	
007	992-01050-011	WASHER 5	2	
008	990-51050-503	HEX. HOLE BOLT 5X50	2	
017	203-0604A-20	GROMMET	1	
020	994-15040-162	SCREW 4X16/PS	3	
047	277-0634F-90	CLUTCH A'SSY	1	
061	990-72045-164	TAPPING SCREW 4.5X16	1	
062	994-25040-128	BOLT 4X12PS	2	
067	112-0651H-80	FAN CASE COMP.	1	
068	774-0651H-20	STARTER PULLY	1	
069	759-0651H-20	CAM PLATE	1	
070	758-0651H-20	DUMPER SPRING	1	
071	780-06097-20	RECOIL SPRING	1	
072	839-03045-20	SET SCREW	1	
073	783-0651H-20	ROPE	1	
074	785-06410-20	STARTER HANDLE	1	
075	798-0651H-90	STARTER PULLY ASS'Y	1	
076	132-06602-20	DEFLECTOR	1	
077	788-0651H-20	STATER SPRING	2	
078	790-06097-20	STARTER PAWL SPRING	2	
079	993-55050-000	STOP RING E-5	2	

H37 05	**THT-210TS** CARBURETOR

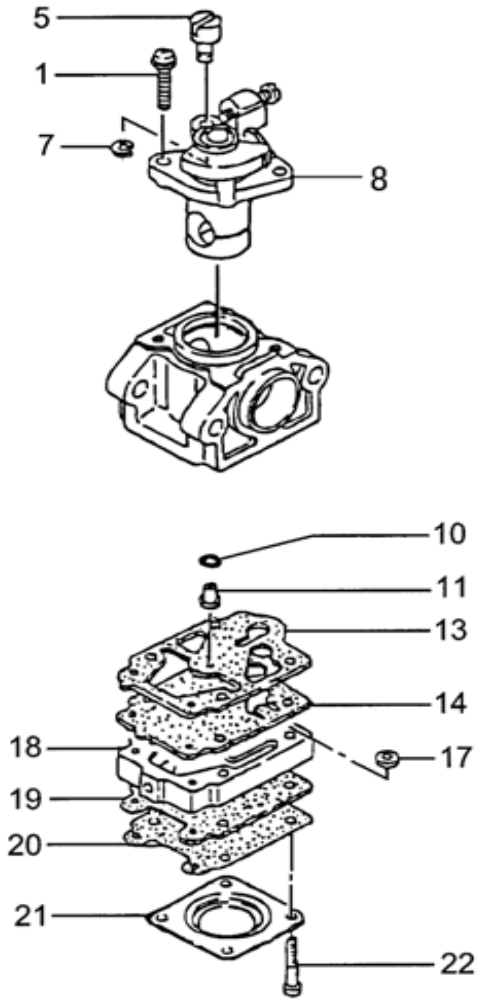

Parts List

Ref.	Part No.	Description	Q'ty	Serial No.
001	548-25140-20	THROTTLE SET SCREW	2	
005	539-25120-20	SWIVEL	1	
007	489-25100-20	STOP RING	1	
008	488-25145-80	THROTTLE VALVE COMP.	1	
010	550-25100-20	O-RING	1	
011	599-2000W-40	MAIN JET #40	1	
013	577-25100-20	PUMP GASKET	1	
014	576-25100-20	PUMP DIAPHRAGM	1	
017	578-25007-20	INLET SCREEN	1	
018	575-25147-80	PUMP BODY COMP.	1	
019	475-25038-20	DIAPHRAGM GASKET	1	
020	474-25001-80	METERING DIAPHRAGM COMP.	1	
021	476-25004-20	DIAPHRAGM COVER	1	
022	548-25101-20	SET SCREW	4	

H37 06	**THT-210TS** FRONT HANDLE

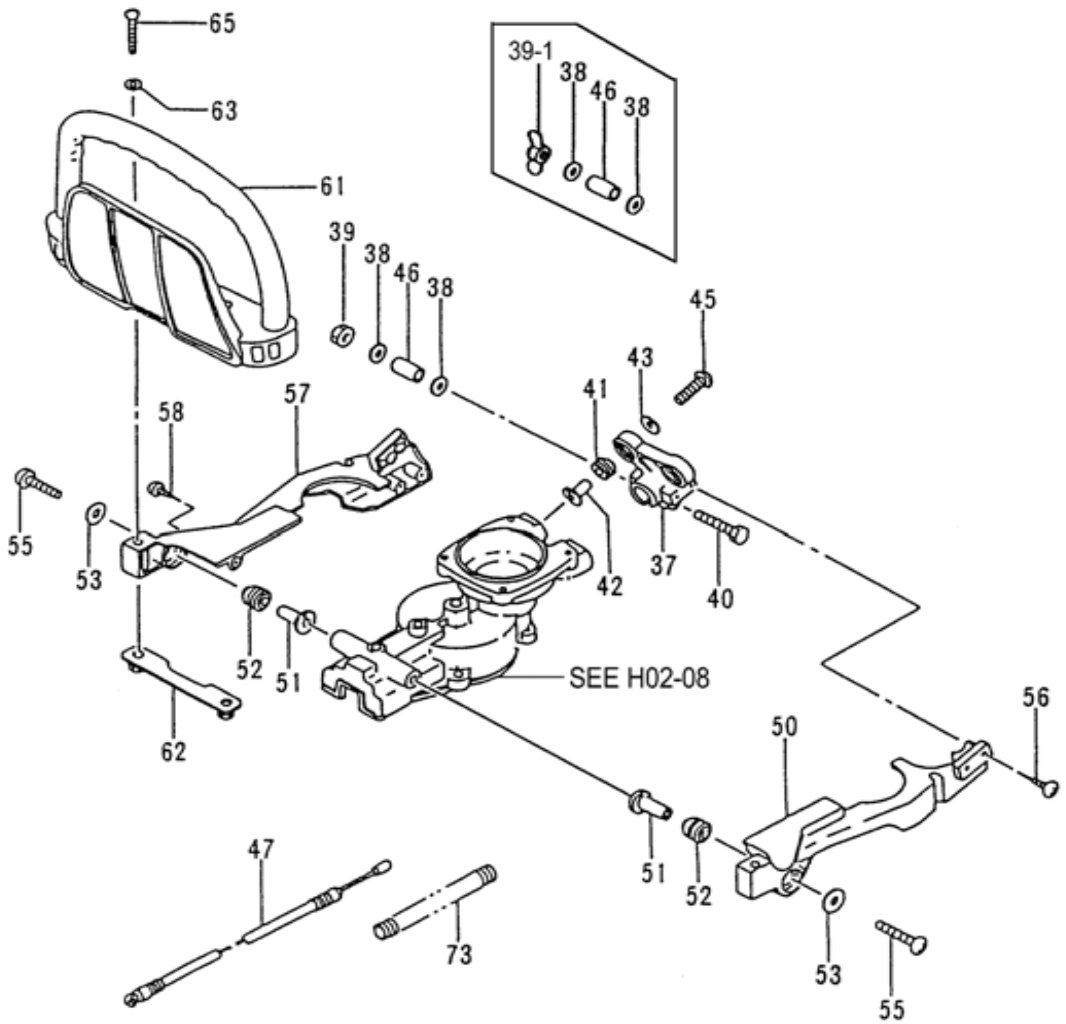

Parts List

Ref.	Part No.	Description	Q'ty	
037	058-33160-20	HANDLE BRACKET	1	
038	992-00060-011	SMALL WASHER 6	2	
039	991-01060-011	NUT 6	1	
040	990-21060-501	BOLT 6X50	1	
041	266-32750-20	DAMPER B	2	
042	276-32710-20	DAMPER COLLAR B	2	
043	368-32057-20	BRAKE SHAFT WASHER	2	
045	994-14050-301	SCREW 5X30/S	2	
046	294-33160-21	COLLAR 16	1	
047	885-06500-80	THROTTLE WIRE, 3.9T	1	
050	249-33160-20	CLAMP BODY A	1	
051	276-32710-20	DAMPER COLLAR B	2	
052	266-32750-20	DAMPER B	2	
053	368-32057-20	BRAKE SHAFT WASHER	2	
055	994-14050-301	SCREW 5X30/S	2	
056	990-73045-124	TAPPING SCREW 4.5X12	4	
057	250-33160-20	CLAMP BODY B	1	
058	990-73045-124	TAPPING SCREW 4.5X12	1	
061	210-33160-21	HANDLE	1	
062	040-33160-80	HANDLE SUPPORT COMP.	1	
063	992-01050-011	WASHER 5	2	
065	994-14050-401	SCREW 5X40/S	2	
073	164-07007-00	SPLIT PROTECTION TUBE,7X70L	1	

H37 07	**THT-210TS** REAR HANDLE

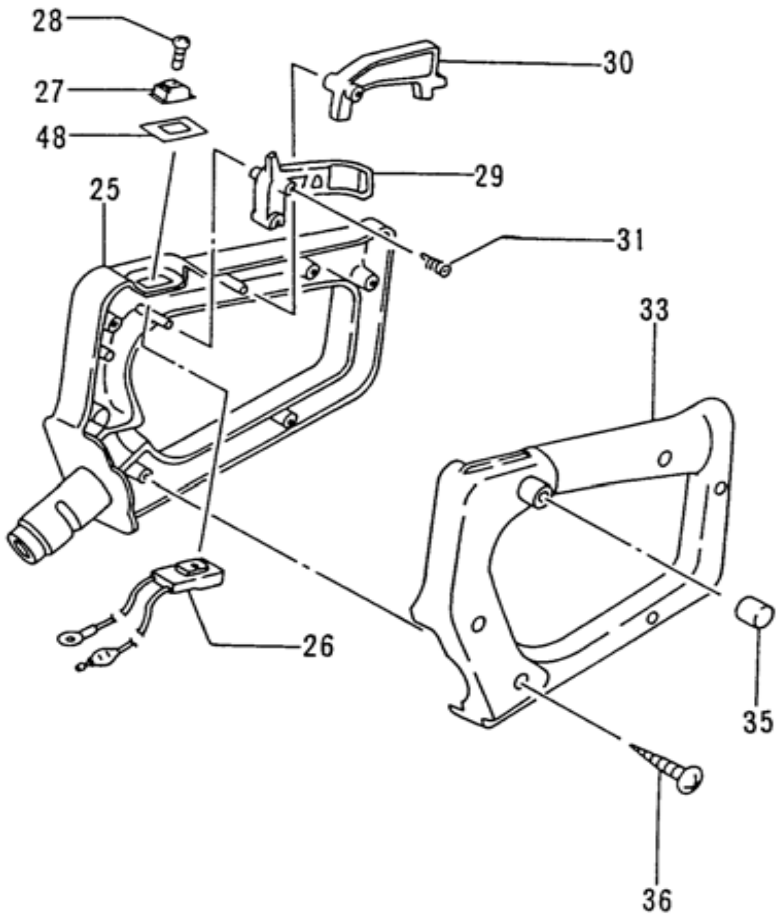

Parts List

Ref.	Part No.	Description	Q'ty	Serial No.
025	050-33160-20	HANDLE A	1	
026	170-33160-80	STOP BUTTON COMP.	1	
027	258-11650-20	BUTTON STOP	1	
028	994-31030-101	SCREW 3X10	1	
029	230-33160-20	THROTTLE LEVER	1	
030	231-33160-20	SAFETY LEVER	1	
031	232-33160-20	THROTTLE LEVER SPRING	1	
033	051-33160-20	HANDLE B	1	
035	765-32120-20	CAP	1	
036	990-72045-164	TAPPING SCREW 4.5X16	6	
048	925-33160-20	STOP BUTTON MARK	1	

H37 08	**THT-210TS** GEAR CASE / BLADE

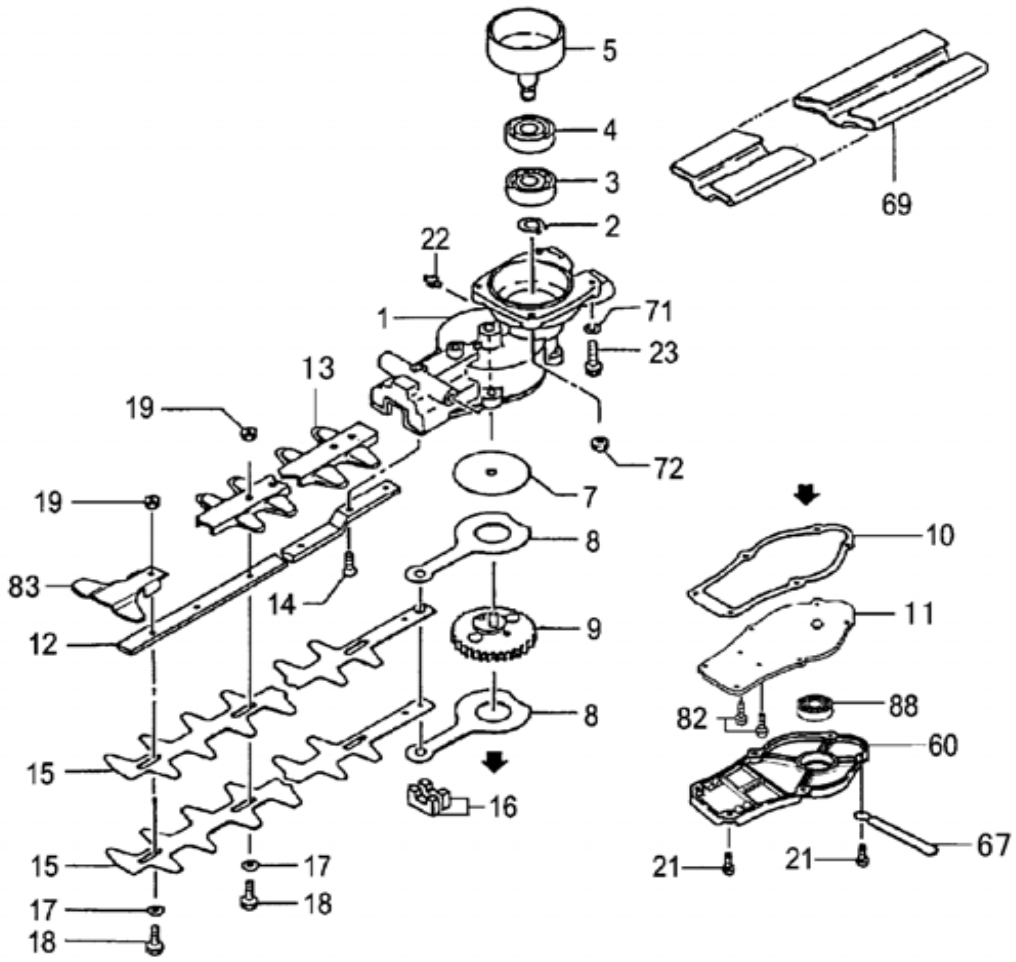

Parts List

Ref.	Part No.	Description	Q'ty	Serial No.
001	300-33194-80	GEAR CASE COMP	1	
002	993-50015-002	STOP RING C-15, OUTER	1	
003	999-61600-200	BALL BEARING #6002, 32MM/OD	1	
004	999-61600-202	BALL BEARING #6002Z, 32MM/OD	1	
005	288-33180-80	CLUTCH DRUM COMP.	1	
007	075-33160-20	GUIDE PLATE	1	
008	101-33190-20	CAM ROD	2	
009	292-33194-80	GEAR 2 COMP.	1	
010	303-33160-20	GEAR CASE GASKET	1	
011	630-33165-20	GEAR CASE COVER	1	
012	122-33248-20	CUTTER GUIDE 734L M6	1	
013	136-33160-20	PROTECTION PLATE	1	
014	990-52060-165	HEX HOLE FLUSH SCREW 6X16	2	
015	120-33168-21	CUTTER A (696.5L)	2	
016	085-33160-20	GREASE SEAL A	2	
017	129-33202-20	WASHER 7 BLACK	5	
018	124-32287-20	FIXING BOLT A M6	5	
019	991-82060-001	FLANGE NUT 6	5	
021	994-61040-124	HEX. HOLE BOLT 4X12S	6	
022	300-32250-80	GREASE NIPPLE COMP.	1	
023	990-51060-143	HEX. HOLE BOLT 6X14	2	
060	301-33160-21	GEAR CASE B	1	
067	198-11600-80	CORD CLAMP COMP.	1	
069	138-33171-20	CUTTER COVER	1	
071	992-10060-012	S.WASHER 6	2	
072	994-40060-011	SPRING NUT 6	2	
082	994-61040-104	HEX. HOLE BOLT 4X10S	2	
083	135-33191-20	GURD PLATE	1	
088	999-61608-013	BALL BEARING 608 ZZ C3	1	

H37 09	**THT-210TS** TOOLS

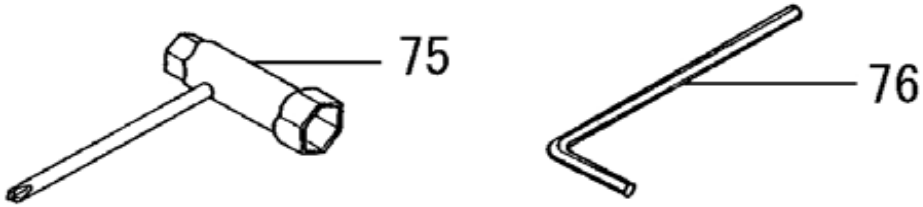

Parts List

Ref.	Part No.	Description	Q'ty	Serial No.
075	036-29331-50	COMBI. BOX SPANNER 10X19 ,PLUS	1	
076	813-20000-20	HEX. WRENCH 4	1	