Jonsered

IPL, LT2217 A, 96041010401, 2010-01

LT2217 A

Spare parts
Ersatzteile
Pièces détachées
Reserve onderdelen
Repuestos
Reservdelar

ILLUSTRATED PARTS LIST

MODEL NO. 96041010401
CUSTOMER CATALOG NO. LT2217A
PRODUCT NO. 960 41 01-04

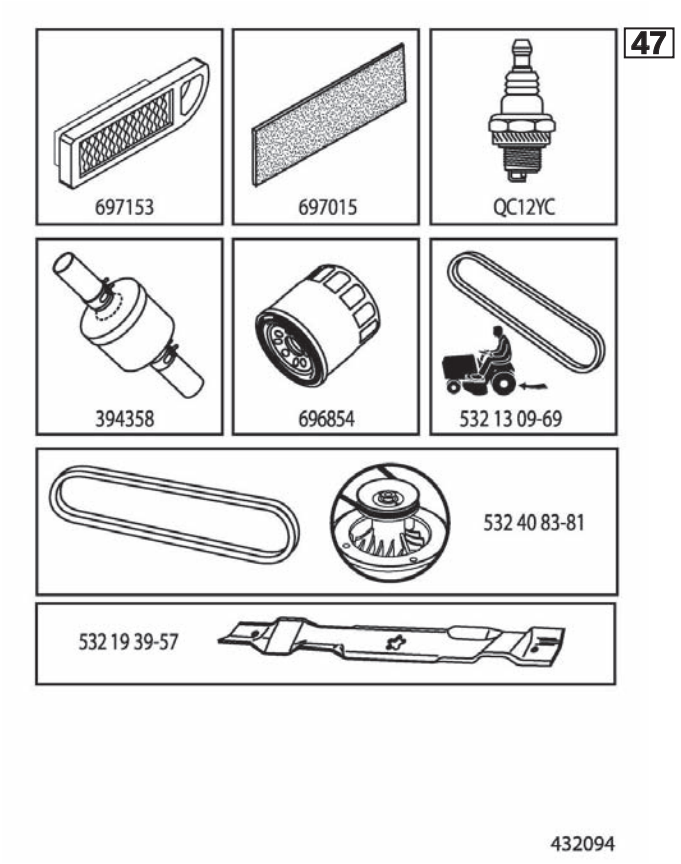

TRACTOR - - MODEL NO. LT2217A (96041010401), PRODUCT NO. 960 41 01-04

DECALS 27

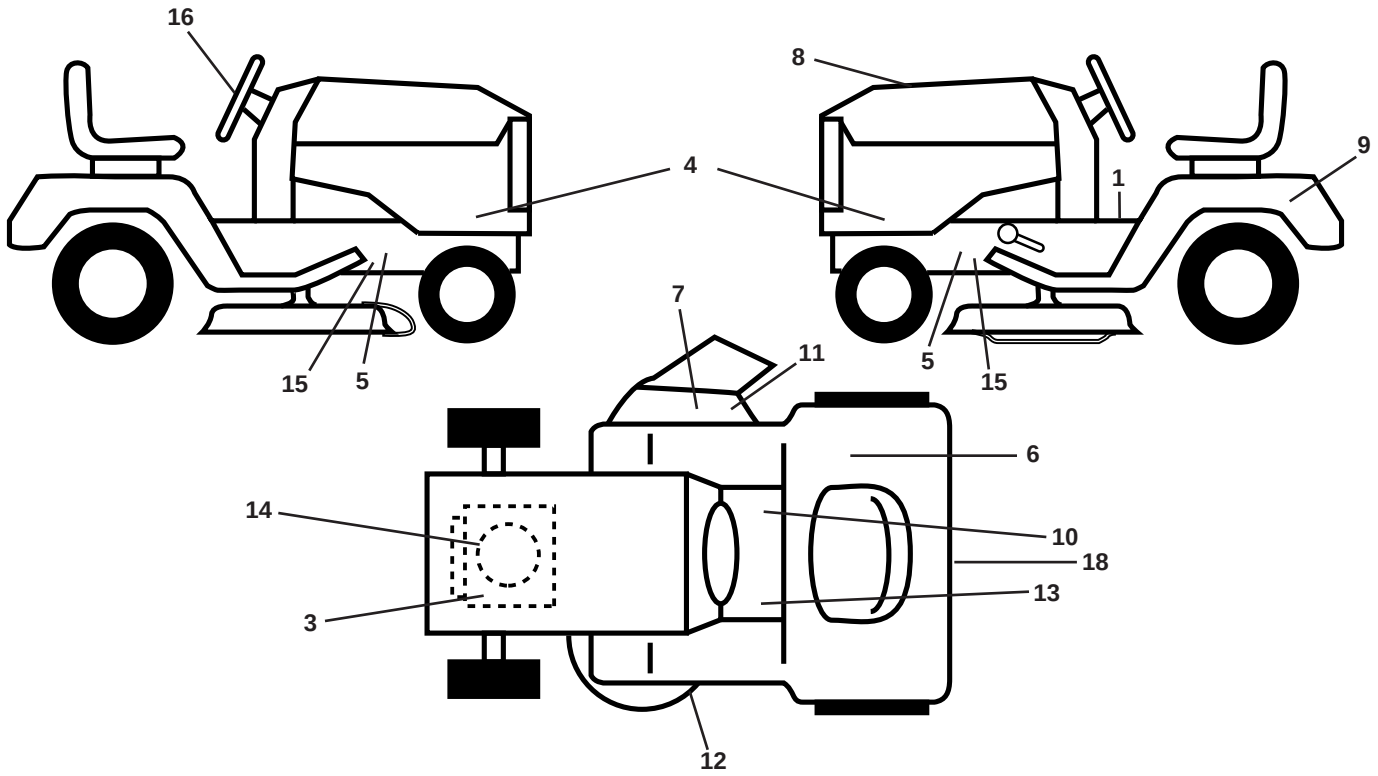

KEY NO.	PART NO.	DESCRIPTION
1	532 40 03-89	Decal, Operators
3	532 19 68-41	Decal, Warning Eng. Symbols
4	532 42 40-76	Decal, Panel Side
5	532 15 97-36	Decal, Chassis Hot Muffler
6	532 18 04-32	Decal, Fender 100 DB/CE
7	532 18 21-66	Decal, Cutfinger CE
8	532 43 20-94	Decal, Rpl
9	532 14 50-05	Decal, Battery Dnge/Poi
10	532 14 08-37	Decal, Saddle Brake Parking
11	532 19 63-57	Decal, Warning

KEY NO.	PART NO.	DESCRIPTION
12	532 19 43-02	Decal, Mower V-Belt Schematic
13	532 15 97-37	Decal, Brake/Clutch Symbol
14	532 40 91-51	Decal, Eng. HP
15	532 40 11-46	Decal Warning Service/fire
16	532 42 26-85	Decal, Steering
18	532 18 39-30	Decal, Jonsered
- -	532 16 69-60	Decal, Bypass
- -	532 16 25-98	Decal, Drawbar Load Limit
- -	532 40 95-05	Pad, Footrest, LH
- -	532 41 12-73	Pad, Footrest, RH
- -	532 43 29-83	Manual Oper. Euro

WHEELS AND TIRES

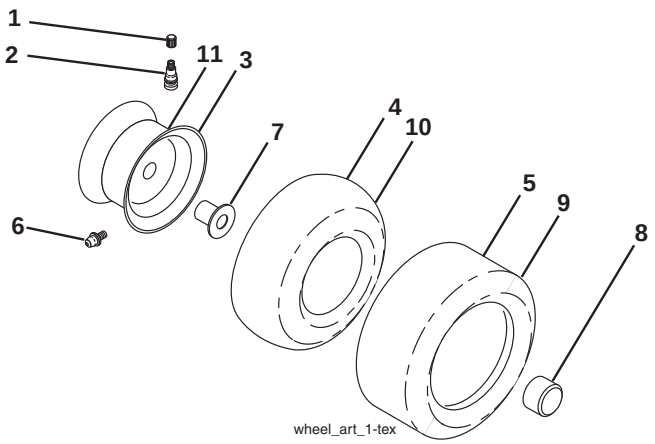

KEY NO.	PART NO.	DESCRIPTION
1	532 05 91-92	Cap Valve Tire
2	532 06 51-39	Stem Valve
3	532 13 83-36	Rim Asm 6" Front
4	532 05 99-04	Tube Front (Service Item Only)
5	532 10 62-22	Tire F T 15 x 6 0 - 6
6	532 12 49-57	Fitting Grease (Front Wheel Only)
7	532 12 49-59	Bearing Flange (Front Wheel Only)
8	532 17 50-39	Cap Axle Blk 1 50 x 1 00
9	532 42 05-31	Tire R 18 x 9.5-8 Turf Saver LT
10	532 12 49-26	Tube Rear (Service Item Only)
11	532 13 83-37	Rim Asm 8" Rear
- -	532 14 43-34	Sealant, Tire (10 oz. Tube)

NOTE: All component dimensions given in U.S. inches
1 inch = 25.4 mm

TRACTOR - - MODEL NO. LT2217A (96041010401), PRODUCT NO. 960 41 01-04

SCHEMATIC 38

SCH11

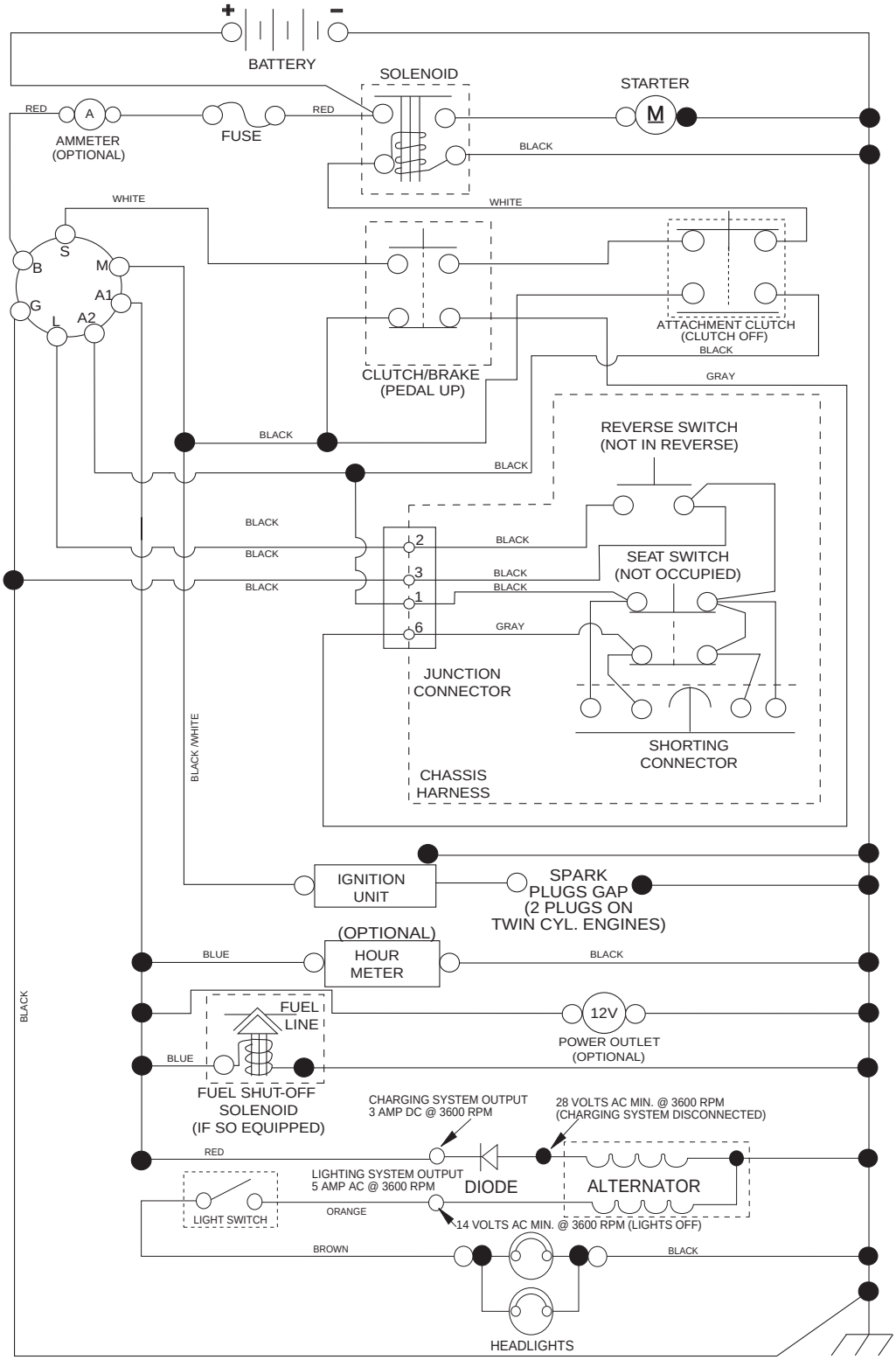

NOTE

YOUR TRACTOR IS EQUIPPED WITH A SPECIAL ALTERNATOR SYSTEM. THE LIGHTS ARE NOT CONNECTED TO THE BATTERY, BUT HAVE THEIR OWN ELECTRICAL SOURCE. BECAUSE OF THIS, THE BRIGHTNESS OF THE LIGHTS WILL CHANGE WITH ENGINE SPEED. AT IDLE THE LIGHTS WILL DIM. AS THE ENGINE IS SPEEDED UP, THE LIGHTS WILL BECOME THEIR BRIGHTEST.

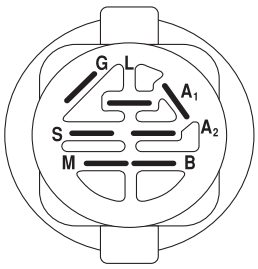

IGNITION SWITCH

POSITION	CIRCUIT "MAKE"
OFF	M+G+A1
RUN/OVERRIDE	B+A1
RUN	B+A1 L+A2
START	B + S + A1

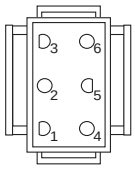

CHASSIS HARNESS CONNECTOR (MATING SIDE)

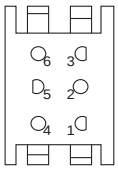

DASH HARNESS CONNECTOR (MATING SIDE)

WIRING INSULATED CLIPS NOTE: IF WIRING INSULATED CLIPS WERE REMOVED FOR SERVICING OF UNIT, THEY SHOULD BE RE-INSTALLED TO PROPERLY SECURE YOUR WIRING.

NON-REMOVABLE CONNECTIONS

REMOVABLE CONNECTIONS

TRACTOR - - MODEL NO. LT2217A (96041010401), PRODUCT NO. 960 41 01-04
ELECTRICAL 32

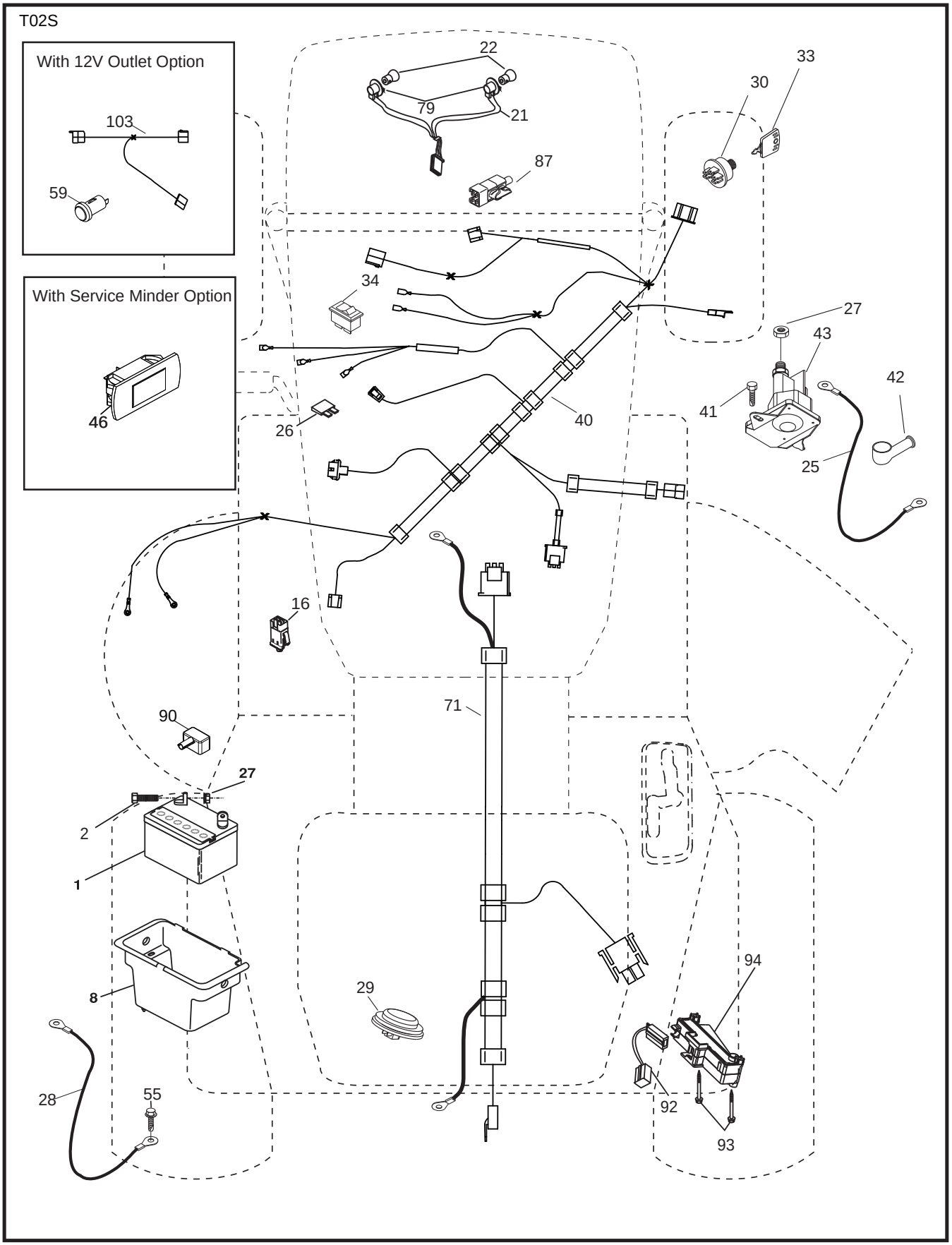

KEY NO.	PART NO.	DESCRIPTION
1	532 16 34-65	Battery
2	874 76 04-12	Bolt Hex Head 1/4-20 x 3/4
8	532 19 32-28	Box Battery
16	532 17 61-38	Switch Interlock Push-In
21	532 40 02-52	Harness Socket Light w/4152J
22	532 00 41-52	Bulb Light
25	532 41 28-94	Cable Starter
26	532 17 51-58	Fuse
27	873 51 04-00	Nut Keps Hex 1/4-20 unc
28	532 19 88-85	Cable, Ground
29	532 40 15-45	Switch, Seat
30	532 19 33-50	Switch, Ign
33	532 41 19-35	Key/Chain
34	532 11 07-12	Switch Light / Reset
40	532 40 10-98	Harness Ign. Dash
41	817 72 04-08	Screw Thd Cut 1/4-20 x 1/2
42	532 13 15-63	Cover, Terminal
43	532 19 25-07	Solenoid
55	817 06 05-12	Screw Thdrol 5/16-18 x 3/4 TYTT
71	532 40 04-49	Harness Ign.
79	532 17 52-42	Socket Asm Bulb
87	532 19 78-02	Switch Interlock
90	532 40 07-25	Cover Terminal
92	532 19 66-15	Harness Pigtail Reverse Switch
93	532 19 25-40	Screw Plastite 10-14 x 2.0
94	532 19 18-34	Module Reverse ROS

NOTE: All component dimensions given in U.S. inches
1 inch = 25.4 mm

TRACTOR - - MODEL NO. LT2217A (96041010401), PRODUCT NO. 960 41 01-04

CHASSIS AND ENCLOSURES 39

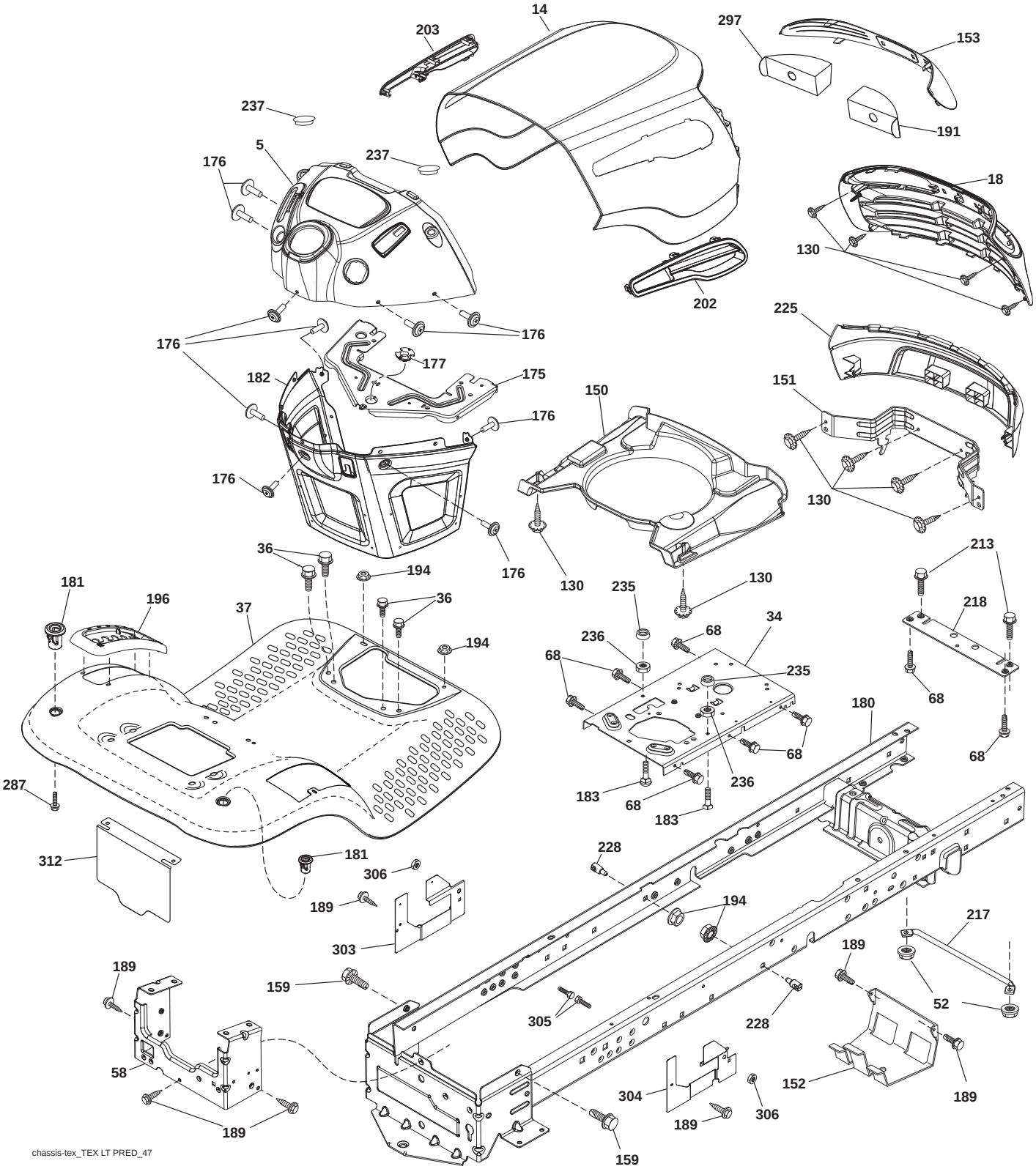

KEY NO.	PART NO.	DESCRIPTION
5	532 40 95-97	Dash
14	532 42 43-32	Hood
18	532 42 65-11	Grille Asm.
34	532 19 61-25	Plate Engine
36	817 06 05-12	Screw 5/16-18 x 3/4
37	532 42 43-35	Fender
52	873 68 05-00	Nut Crown Lock 5/16
58	532 41 22-80	Drawbar Upper
68	817 49 05-08	Screw THDROL 5/16-18 x 1/2
130	532 41 63-58	Screw #10 x .0750
150	532 40 02-67	Air Duct
151	532 18 75-68	Bracket Pivot
152	532 19 95-35	Shield Browning
153	532 40 97-40	Lens
159	817 00 06-12	Screw 3/8-16 x 3/4
175	532 19 94-72	Crossmember
176	532 40 07-76	Screw 10-24 x 5/8
177	532 19 52-28	Bushing Steering
180	532 41 50-63	Chassis
181	532 40 47-96	Bushing Mtg. Fender Crgo
182	532 40 71-76	Dash Lower
183	874 52 05-20	Bolt 5/16-18 unc x 1-1/4
189	817 00 05-12	Screw 5/16-18 x 3/4
191	532 41 65-02	Insert Reflective RH
194	873 90 05-00	Nut Lock Hex Flange 5/16-18
196	532 41 45-79	Console Asm. Deck Lift
202	532 42 33-17	Vent Side RH
203	532 42 33-16	Vent Side LH
213	874 76 05-12	Bolt 5/16-18 x 3/4
217	532 40 91-67	Rod Pivot Hood
218	532 19 63-95	X-Piece Hood Stop
225	532 42 32-28	Bumper Grille
228	532 19 51-61	Stud Fastener
235	532 40 61-29	Spacer Fender
236	873 93 05-00	Nut Lock 5/16-18 unc
237	532 40 37-04	Plug Mount cargo
287	817 60 04-06	Screw Hex
297	532 40 18-27	Insert Reflective LH
303	532 42 09-59	Shield Chassis French LH
304	532 42 15-09	Shield Chassis French RH
305	872 11 06-06	Bolt 3/8 - 16 x 3/4
306	873 90 06-00	Nut Lock 3/8 - 16
312	532 42 09-60	Shield Drawbar French

NOTE: All component dimensions given in U.S. inches
1 inch = 25.4 mm

TRACTOR - - MODEL NO. LT2217A (96041010401), PRODUCT NO. 960 41 01-04

DRIVE 40

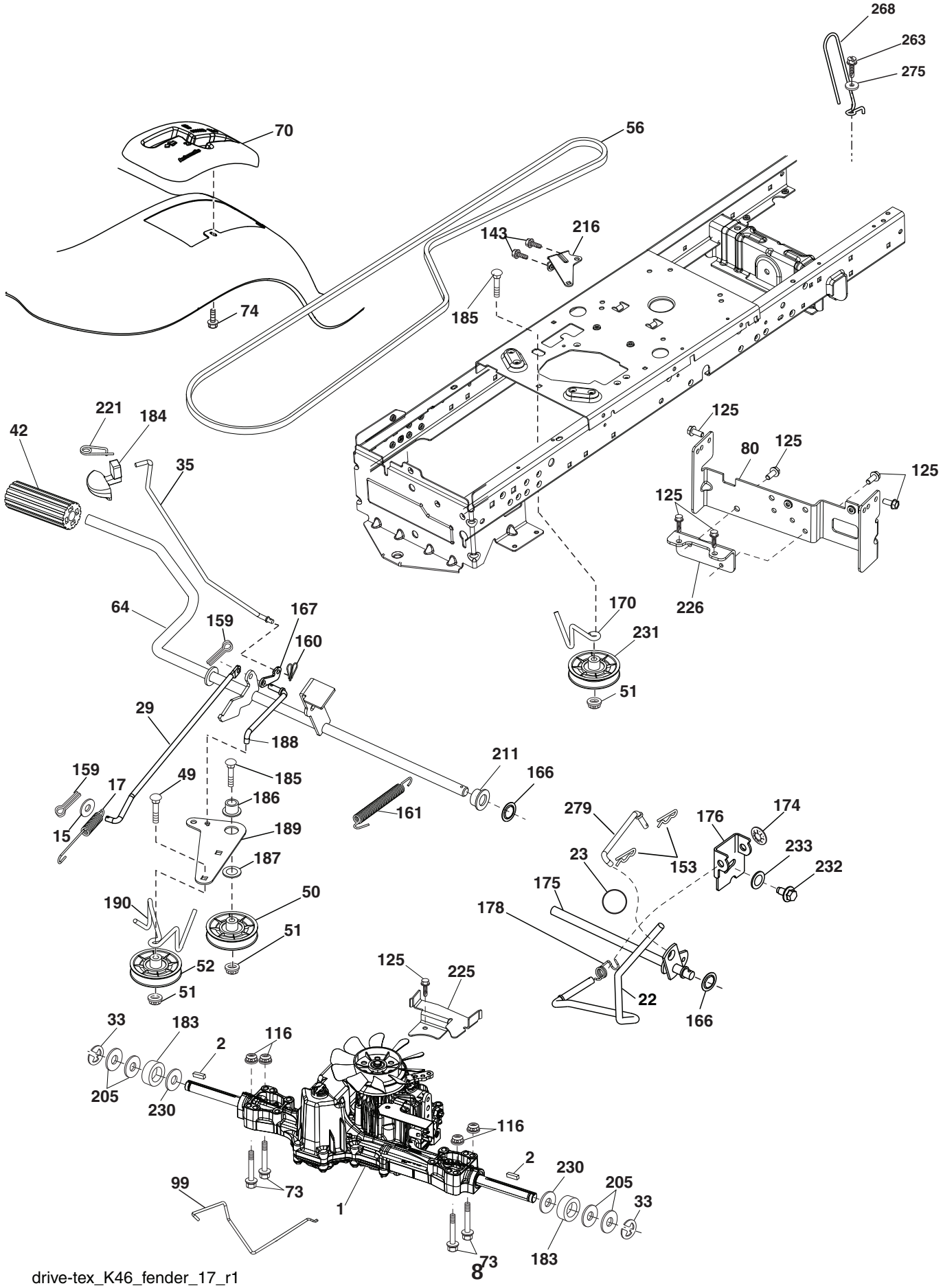

TRACTOR - - MODEL NO. LT2217A (96041010401), PRODUCT NO. 960 41 01-04
DRIVE 40

KEY NO.	PART NO.	DESCRIPTION
1	- - - - - - - -	Transaxle,Tuff Torq K46BA
2	532 12 35-83	Key
15	819 13 13-16	Washer 13/32 x 13/16 x 16 Ga.
17	532 41 36-78	Spring, Brake
22	532 19 76-60	Rod Shift
23	532 12 12-74	Knob
29	532 40 38-06	Rod, Brake
33	812 00 00-01	Ring E
35	532 40 10-31	Rod, Brake, Park
42	532 12 48-72	Cover, Foot Pedal
49	872 11 06-14	Bolt
50	532 19 43-27	Pulley Idler Flat
51	873 90 06-00	Lock Nut 3/8-16
52	532 19 43-26	Idler V-Groove 910" Offset
56	532 13 09-69	V-Belt, Drive
64	532 19 62-00	Shaft Asm. Pedal Brake Control
70	532 41 13-29	Console Shift
73	874 49 05-44	Bolt Hex Flghd 5/16-18 Gr. 5
74	532 14 24-32	Screw Hex Wsh Hi-Lo 1/4 x 1/2 unc
80	532 41 00-24	Strap Torque
99	532 41 57-42	Rod Bypass
116	873 90 05-00	Nut Lock Hex Flange 5/16-18
125	817 00 05-12	Screw 5/16-18 x 3/4
143	817 49 05-08	Screw Thdrol 5/16-18 x 1/2
153	532 12 47-88	Retainer Spring
159	876 02 04-12	Pin Cotter 1/8 x 3/4
160	532 16 94-84	Retainer Clip
161	532 10 57-09	Spring, Return, Clutch
166	532 42 83-05	Nut Push
167	532 40 52-57	Latch Brake Parking
170	532 41 34-30	Keeper Belt Centerspan
174	532 19 72-89	Nut Push
175	532 40 85-39	Shaft Asm Shift
176	532 19 62-14	Arm Clevis Rod Shift
178	532 19 74-56	Spring Shift
183	532 13 70-57	Spacer Axle
184	532 40 97-47	Handle Parking Brake
185	872 11 06-22	Bolt RDHD SQNK 3/8-16 unc x 2
186	532 19 43-21	Spacer Retainer
187	819 13 32-10	Washer
188	532 19 43-23	Link Clutch Ground Drive
189	532 19 43-17	Bellcrank Ground Drive
190	532 19 43-18	Keeper Bellcrank Ground Drive
205	532 12 17-48	Washer
211	532 19 62-12	Bushing Shaft
216	532 19 61-31	Bracket Pulley Idler
221	532 40 31-87	Retainer Spring Clip Handle
225	532 40 33-19	Keeper Belt Transaxle
226	532 40 15-64	Bracket Mount Torque
230	532 18 89-67	Washer Harden
231	532 40 72-87	Idler V-Groove
232	874 78 07-16	Bolt 7/16-14 x 1 Gr. 5
233	532 40 52-96	Washer Serrated
263	817 00 06-12	Screw 3/8-16 x 3/4
268	532 18 24-02	Guard Muffler
275	819 13 16-14	Washer 13/32 x 1 x 14 Ga.
279	532 41 31-50	Link Shift

NOTE: All component dimensions given in U.S. inches
1 inch = 25.4 mm

ENGINE 24

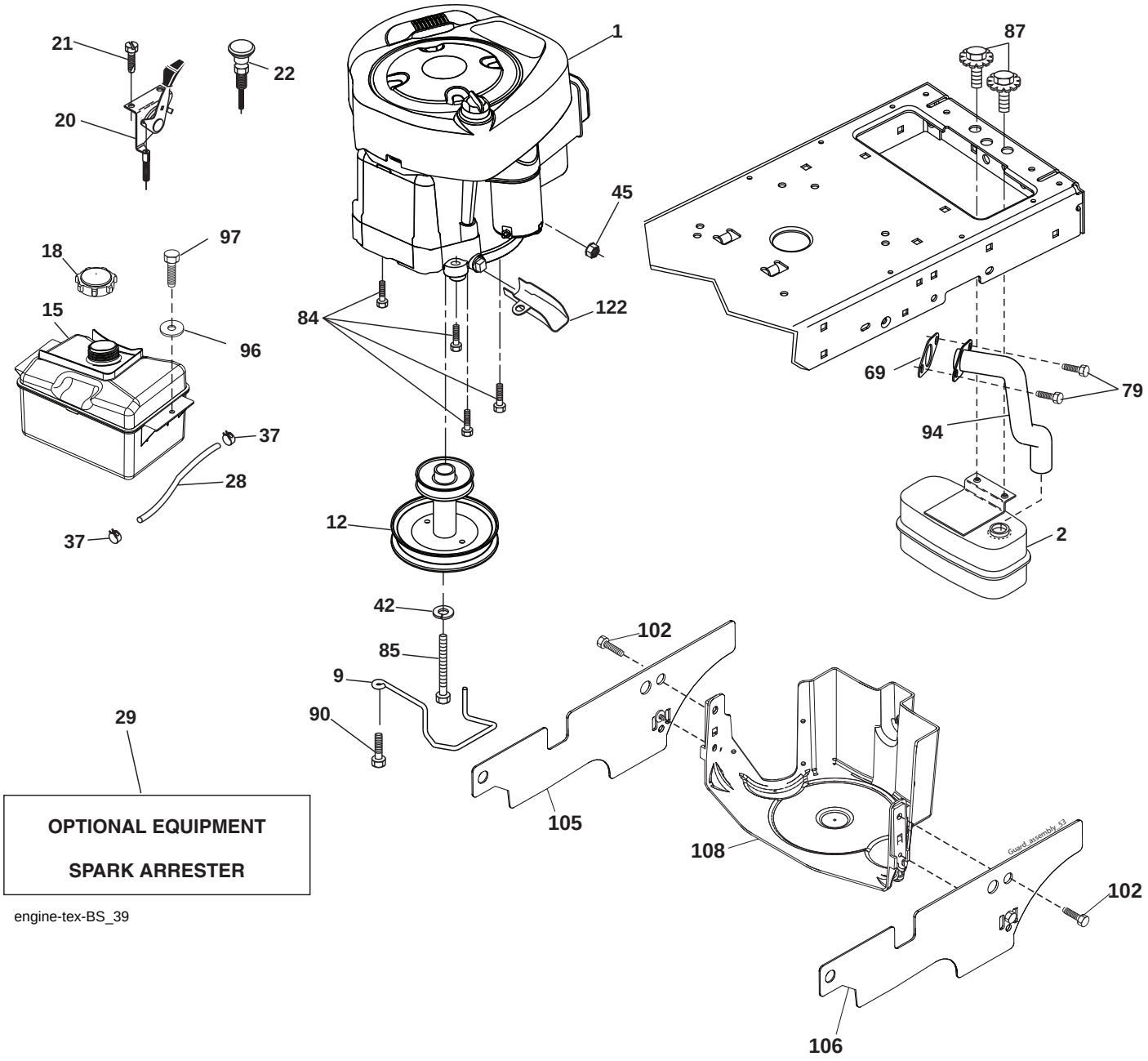

OPTIONAL EQUIPMENT

SPARK ARRESTER

engine-tex-BS_39

ENGINE 24

KEY NO.	PART NO.	DESCRIPTION
1	- - - - - -	Engine Briggs Model No. 31E777-0719-B1
2	532 18 86-55	Muffler
9	532 19 43-20	Keeper Belt Engine
12	532 40 54-71	Pulley Engine
15	532 40 75-45	Tank Fuel
18	532 43 02-20	Cap Asm Fuel
20	532 18 38-97	Control Throttle
21	532 41 63-58	Screw 10 x 0.750
22	532 19 49-81	Control Choke
28	532 13 70-40	Fuel Line
29	532 13 71-80	Spark Arrester Kit
37	532 12 34-87	Clamp Hose
42	810 04 07-00	Bolt 5/16-18 unc x 3/4 w/Sems
45	873 51 04-00	Nut Keps Hex 1/4-20 unc
69	532 16 52-91	Gasket
79	532 19 23-34	Screw 5/16-18 x .75
84	817 06 06-20	Screw 3/8-16 x 1-1/4
85	532 17 39-37	Bolt Hex 7/16-20 x 4 Gr. 5
87	532 17 18-77	Bolt 5/16 x 18 UNC x 3/4 w/SEMS
90	817 00 06-16	Screw 3/8-16 x 1
94	532 40 54-50	Exhaust Tube
96	819 09 14-16	Washer 9/32 x 7/8 x 16 Ga.
97	817 67 04-12	Screw 1/4-20 x 3/4
105	532 44 06-81	Shield Side LH
106	532 44 06-80	Shield Side RH
108	532 42 17-94	Cover Asm Engine
122	532 42 19-22	Extension Drain Oil

NOTE: All component dimensions given in U.S. inches
1 inch = 25.4 mm

Engine Power Rating Information

The gross power rating for individual gas engine models is labeled in accordance with SAE (Society of Automotive Engineers) code J1940 (Small Engine Power & Torque Rating Procedure), and rating performance has been obtained and corrected in accordance with SAE J1995 (Revision 2002-05). Torque values are derived at 3060 RPM; horsepower values are derived at 3600 RPM. Actual gross engine power will be lower and is affected by, among other things, ambient operating conditions and engine-to-engine variability. Given both the wide array of products on which engines are placed and the variety of environmental issues applicable to operating the equipment, the gas engine will not develop the rated gross power when used in a given piece of power equipment (actual “on-site” or net power). This difference is due to a variety of factors including, but not limited to, accessories (air cleaner, exhaust, charging, cooling, carburetor, fuel pump, etc.), application limitations, ambient operating conditions (temperature, humidity, altitude), and engine-to-engine variability. Due to manufacturing and capacity limitations, Briggs & Stratton may substitute an engine of higher rated power for this Series engine.

TRACTOR - - MODEL NO. LT2217A (96041010401), PRODUCT NO. 960 41 01-04

STEERING ASSEMBLY 41

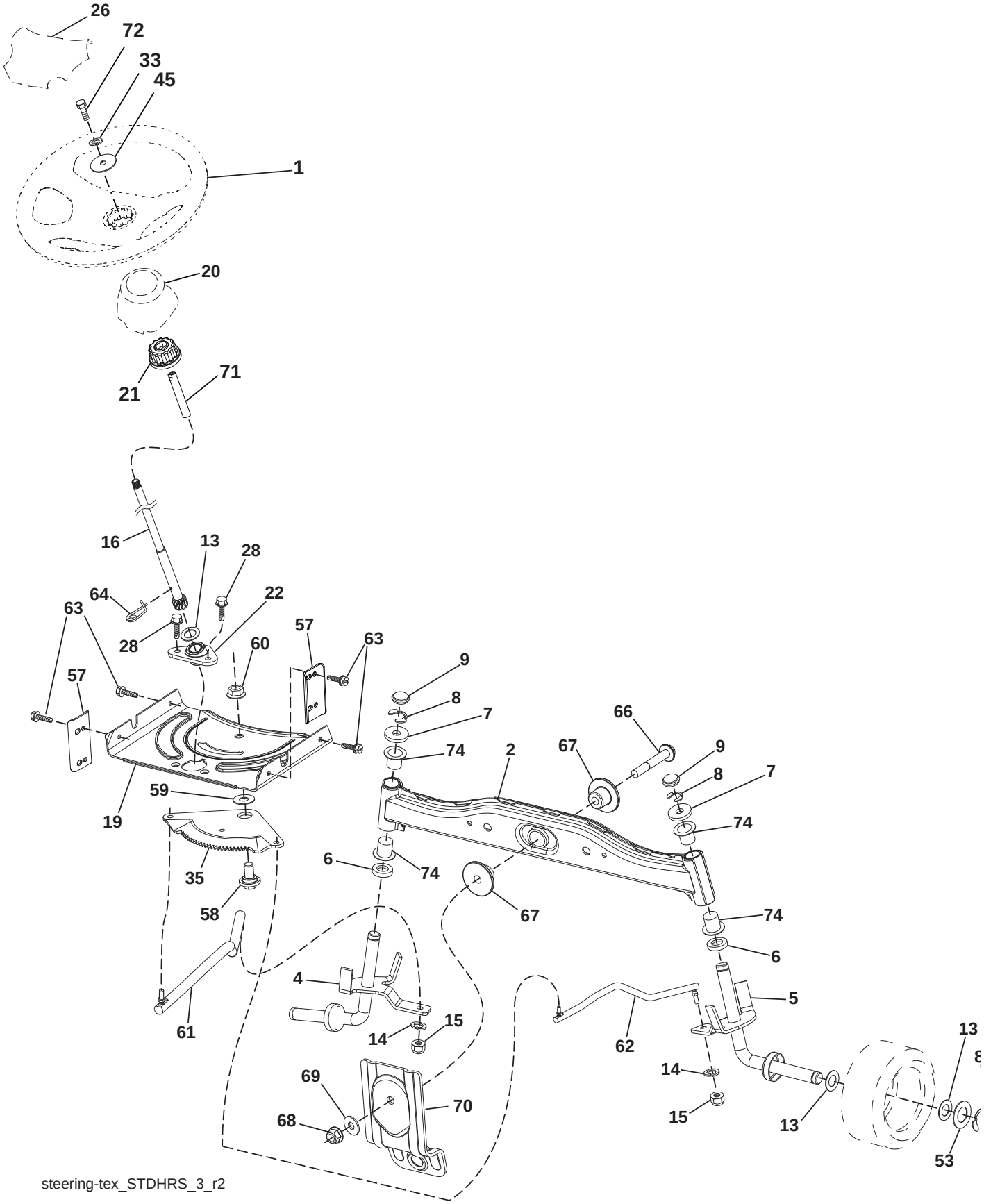

STEERING ASSEMBLY 41

KEY NO.	PART NO.	DESCRIPTION
1	532 42 41-46	Wheel, Steering
2	532 41 81-68	Axle Asm., Front
4	532 40 30-87	Spindle Asm., LH
5	532 40 30-88	Spindle Asm., RH
6	532 12 49-31	Bearing, Race Thrust Hardened
7	532 12 17-48	Washer 25/32 x 1-5/8 x 16 Ga.
8	812 00 00-29	Ring, Clip #T5304-75
9	532 12 12-32	Cap, Spindle
13	532 12 17-49	Washer 25/32 x 1-1/4 x 16 Ga.
14	810 04 06-00	Washer, Lock Hvy Hlcl Spr 3/8
15	873 54 06-00	Nut, Crown Lock 3/8-24 unf
16	532 42 93-73	Shaft Steering
19	532 19 47-29	Plate Steering
20	532 40 97-63	Boot, Steering
21	532 18 67-37	Adapter, Wheel Steering
22	532 42 05-37	Supt. Strg. Lower
26	532 42 41-47	Insert, Wheel Steering
28	817 00 06-12	Screw 3/8-16 x 3/4
33	810 04 05-00	Washer Lock 5/16
35	532 19 47-32	Gear, Sector Plate
45	819 11 38-12	Washer 11/32 x 3/8 x 12 Ga.
53	532 18 89-67	Washer Hardened .793 x 1.637 x .060
57	532 40 74-65	Bracket Upstop
58	532 19 47-47	Bolt Shoulder Sector Pivot CFM
59	532 19 47-48	Washer Thrust Sector Steering
60	873 97 10-00	Nut Flange Lock 5/8-11
61	532 19 47-40	Draglink, LH
62	532 19 47-41	Draglink, RH
63	817 00 05-12	Screw 5/16-18 x 3/4
64	532 19 98-49	Retainer Clip Spring Steering
66	871 02 07-48	Bolt Hex Fghd 7/16-14 x 3 Serr
67	532 19 47-37	Bushing PM Front Axle
68	873 90 07-00	Nut Lock Flange 7/16-14 Gr. 5
69	532 19 91-62	Washer 1.5 x .505 x .118
70	532 19 61-97	Bracket Deck Susp. Front
71	532 19 07-52	Shaft Extension Steering
72	532 42 89-82	Bolt 5/16-18 x 4 w/Patch
74	532 12 49-37	Bearing

NOTE: All component dimensions given in U.S. inches
1 inch = 25.4 mm

TRACTOR - - MODEL NO. LT2217A (96041010401), PRODUCT NO. 960 41 01-04
MOWER DECK 44

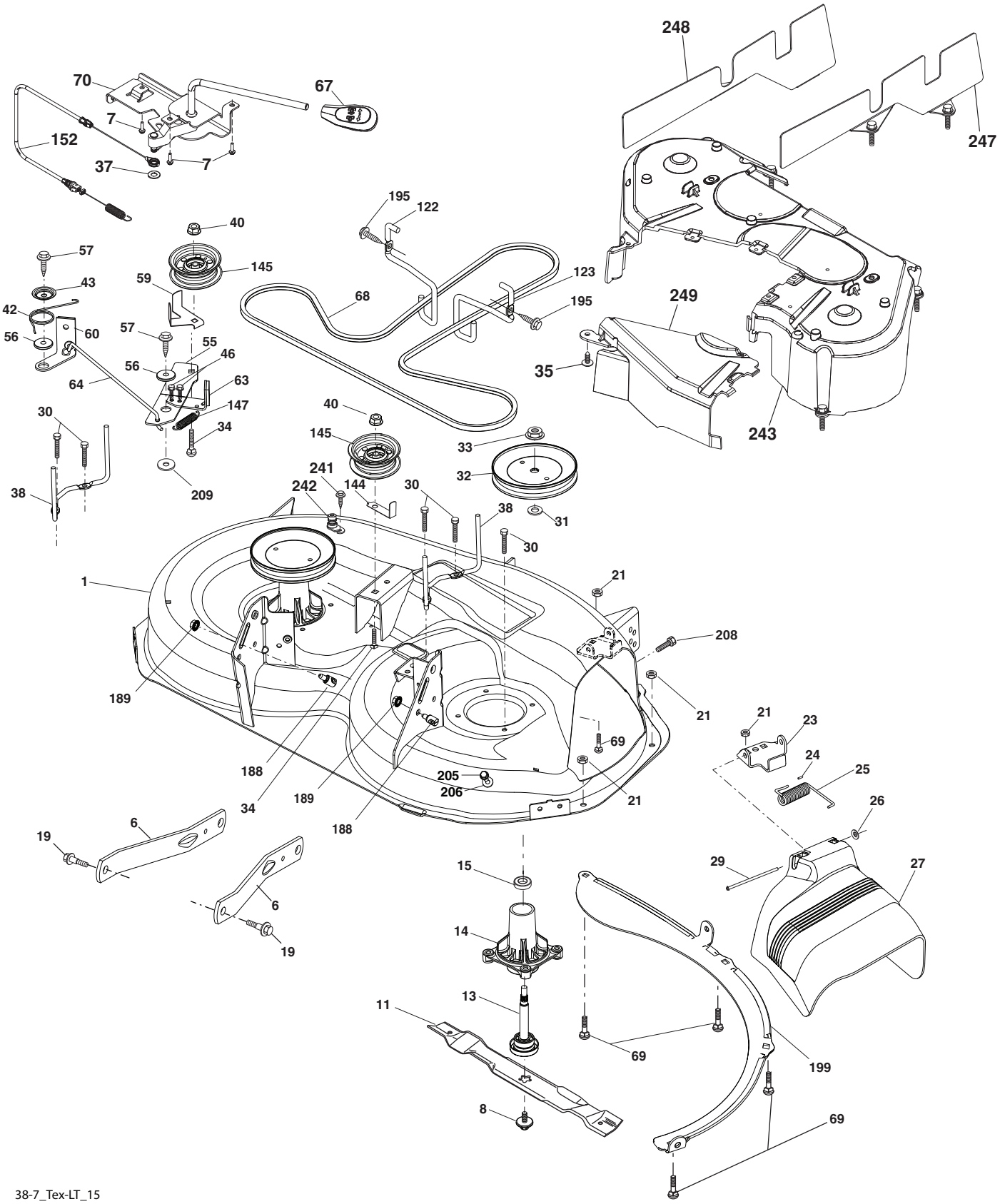

MOWER DECK 44

KEY NO.	PART NO.	DESCRIPTION
1	532 19 42-51	Mower Housing
6	532 19 51-86	Arm Suspension
7	532 41 63-58	Screw #10 x 0.750 BOS Thread
8	532 19 30-03	Bolt/Washer Asm. 7/16-20 unf
11	532 19 39-57	Blade 38" 3NI Premium
13	532 19 28-72	Shaft Assembly, Mandrel
14	532 18 72-81	Housing, Mandrel
15	532 11 04-85	Bearing, Ball, Mandrel
19	532 19 65-39	Bolt, Shoulder
21	873 68 05-00	Nut, Crownlock 5/16-18 unc
23	532 19 25-57	Bracket, Deflector
24	532 10 53-04	Cap, Sleeve
25	532 19 70-26	Spring, Torsion, Deflector
26	532 11 04-52	Nut, Push
27	532 40 16-18	Shield, Deflector
29	532 13 14-91	Rod, Hinge
30	532 17 39-84	Screw Thdrol. Rolling Wsh. Hd.
31	532 18 76-90	Washer, Spacer
32	532 19 97-89	Pulley, Mandrel
33	532 40 02-34	Nut, Toplock, Flanged
34	872 11 06-12	Bolt Carr. Sh. 3/8-16 x 1-1/2 Gr. 5
35	532 13 38-35	Fastener, Christmas Tree
37	819 13 13-16	Washer
38	532 19 95-41	Keeper Belt LH Mandrel
40	873 90 06-00	Nut, Lock Flg. 3/8-16 unc
42	532 19 84-10	Spring Torsion Brake
43	532 19 72-56	Spring Torsion Retainer
46	532 13 77-29	Screw 1/4 - 20 x 5/8
55	532 19 72-49	Arm, Idler
56	532 19 90-92	Spacer, Retainer
57	817 00 06-16	Screw 3/8-16 x 1
59	532 14 10-43	Guard, Tuv. Idler
60	532 19 94-71	Arm Brake Mower
63	532 19 94-70	Arm Brake Mower
64	532 19 97-90	Link Brake
67	532 40 30-12	Handle Clutch Cable
68	532 40 83-81	V-Belt
69	872 14 05-05	Bolt
70	532 40 12-46	Clutch Asm. Manual
122	532 19 72-58	Keeper Belt Engine LH
123	532 19 72-59	Keeper Belt Engine RH
144	532 19 34-14	Keeper Belt
145	532 19 31-97	Pulley Idler
147	532 40 18-72	Spring Return
152	532 43 51-11	Manual Clutch Cable
188	532 19 51-61	Stud Fastener
189	873 90 05-00	Nut Lock Hex Flange
195	817 00 06-12	Screw 3/8-16 x 3/4
199	532 40 00-95	Baffle Vortex
205	817 49 04-16	Screw 1/4 - 20 x 1.00 77
206	819 09 14-16	Washer 9/32 x 7/8 x 16 Ga.
208	817 67 06-08	Screw 3/8 - 16 x 1/2
209	819 13 32-10	Washer 13/32 x 2 x 10
241	532 15 29-27	Screw TT #10-32.5 3/8 Flg.
242	532 41 55-98	Port Washout
243	532 43 23-63	Cover Deck 38-7 Assy.
247	532 43 23-61	Shield Deck RH Assy.
248	532 43 23-60	Shield Deck LH Assy.
249	532 40 65-14	Cover Cable Clutch
- -	532 19 28-70	Mandrel Assembly (Includes housing, shaft assembly, and bearing only - pulley/nut/washer and blade bolt/washers not included)
- -	532 43 16-91	Replacement Mower, Complete

NOTE: All component dimensions given in U.S. inches
1 inch = 25.4 mm

SEAT ASSEMBLY 42

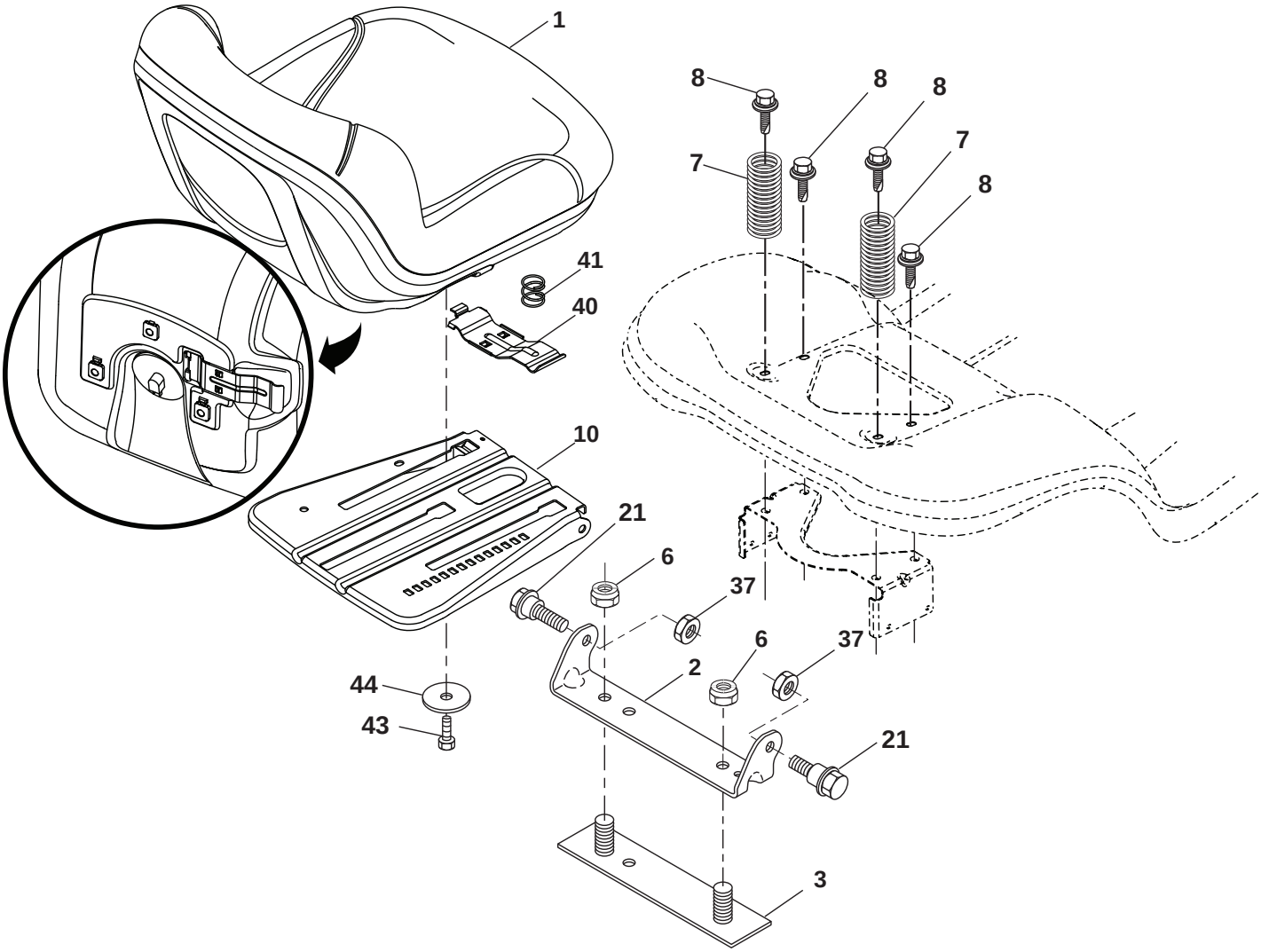

seat-tex_7A-vgt

KEY NO.	PART NO.	DESCRIPTION
1	532 41 14-05	Seat
2	532 18 01-66	Bracket Pivot Fender
3	532 14 06-75	Strap, Asm Fender
6	873 80 06-00	Nut, Lock w/Ins. 3/8-16 unc
7	532 12 41-81	Spring, Seat Cprsn
8	532 17 18-77	Bolt 5/16-18 unc x 3/4 w/Sems
10	532 19 69-77	Pan, Seat
21	532 17 18-52	Bolt, Shoulder 5/16-18
37	873 80 05-00	Nut, Lock 5/16-18 unc
40	532 19 76-61	Handle Slide
41	532 19 82-00	Spring Latch
43	874 76 06-12	Bolt 3/8-16 unc x 3/4
44	819 13 38-12	Washer 13/32 x 2-3/8 x 12

NOTE: All component dimensions given in U.S. inches
1 inch = 25.4 mm

MOWER LIFT 45

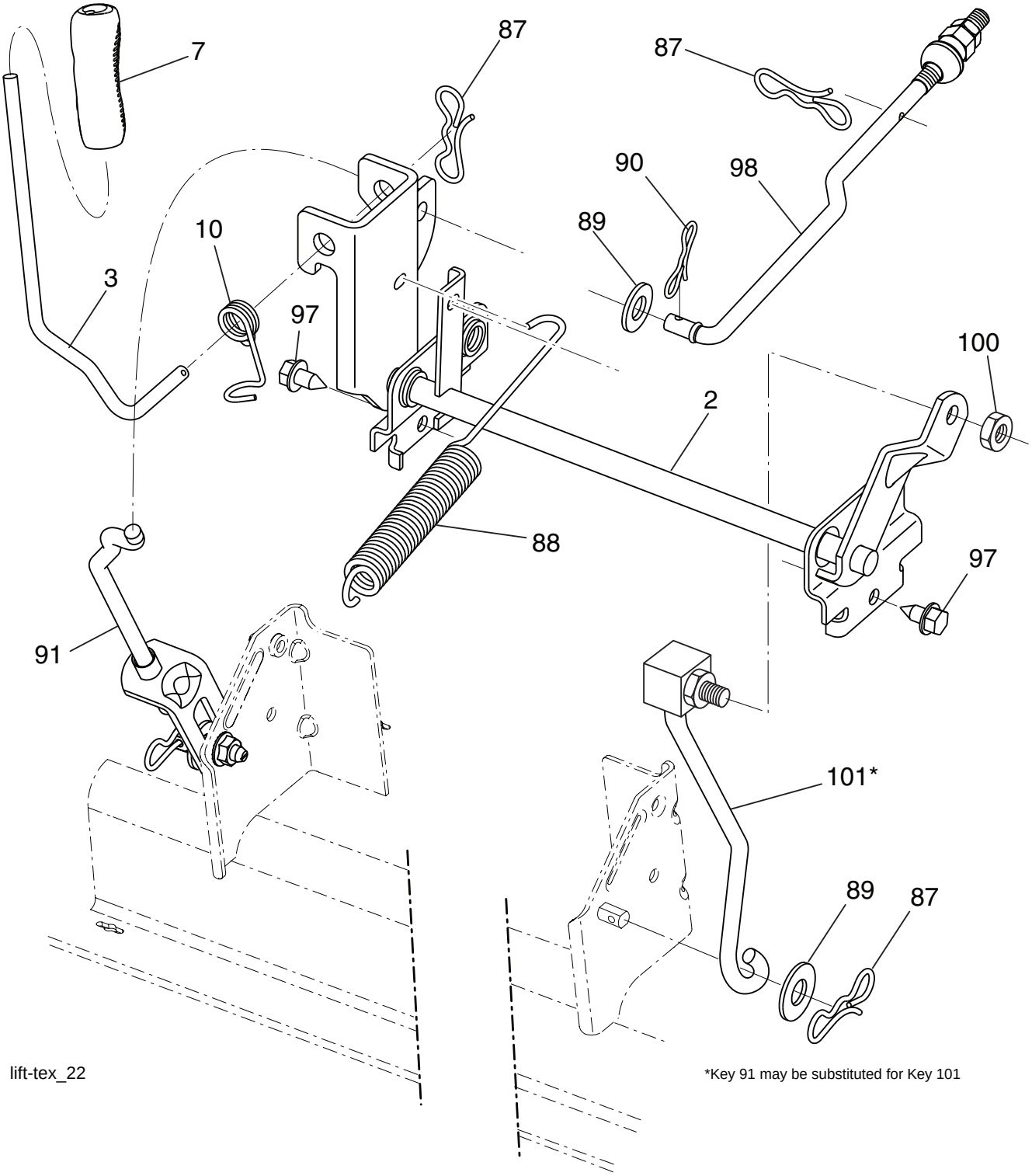

*Key 91 may be substituted for Key 101

KEY NO.	PART NO.	DESCRIPTION
2	532 42 20-27	Shaft Asm., Lift
3	532 19 52-31	Lever Asm., Lift RH
7	532 41 15-55	Grip, Lever
10	532 19 63-14	Spring Torsion
87	532 19 42-09	Pin Cotter 7/16 Bow Tie Lock
88	532 41-07-10	Spring Lift Assist
89	819 19 19-12	Washer Clear Zinc
90	532 19 42-08	Pin Cotter 5/16 Bow Tie Lock

KEY NO.	PART NO.	DESCRIPTION
91	532 19 51-81	Link Lift Susp Mower Rear
97	817 00 06-12	Screw 3/8-16 x .75 Smgml Tap/R.Z
98	532 19 52-70	Link Lift Susp Front Mower
100	873 93 06-00	Nut Centerlock 3/8-16
101	532 40-70-03	Link Asm. Lift FXD

NOTE: All component dimensions given in U.S. inches
1 inch = 25.4 mm