Jonsered

IPL, LT2218 CMA2, 96061026600, 2010-01

LT2218 CMA2

Spare parts
Ersatzteile
Pièces détachées
Reserve onderdelen
Repuestos
Reservdelar

ILLUSTRATED PARTS LIST

MODEL NO. 96061026600
CUSTOMER CATALOG NO. LT2218CMA2
PRODUCT NO. 960 61 02-66

47

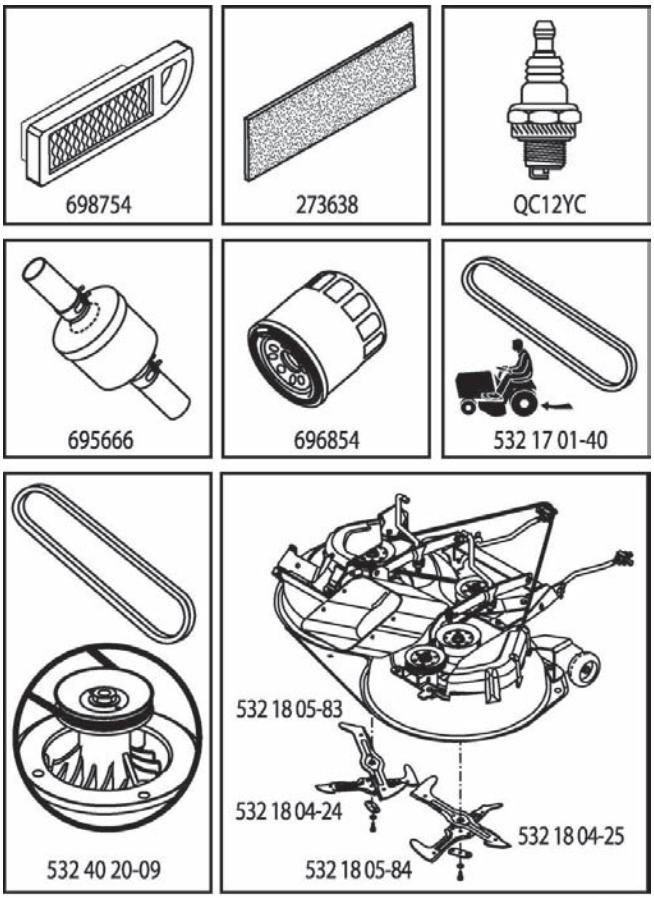

TRACTOR - - MODEL NO. LT2218CMA2 (96061026600), PRODUCT NO. 960 61 02-66
DECALS 27

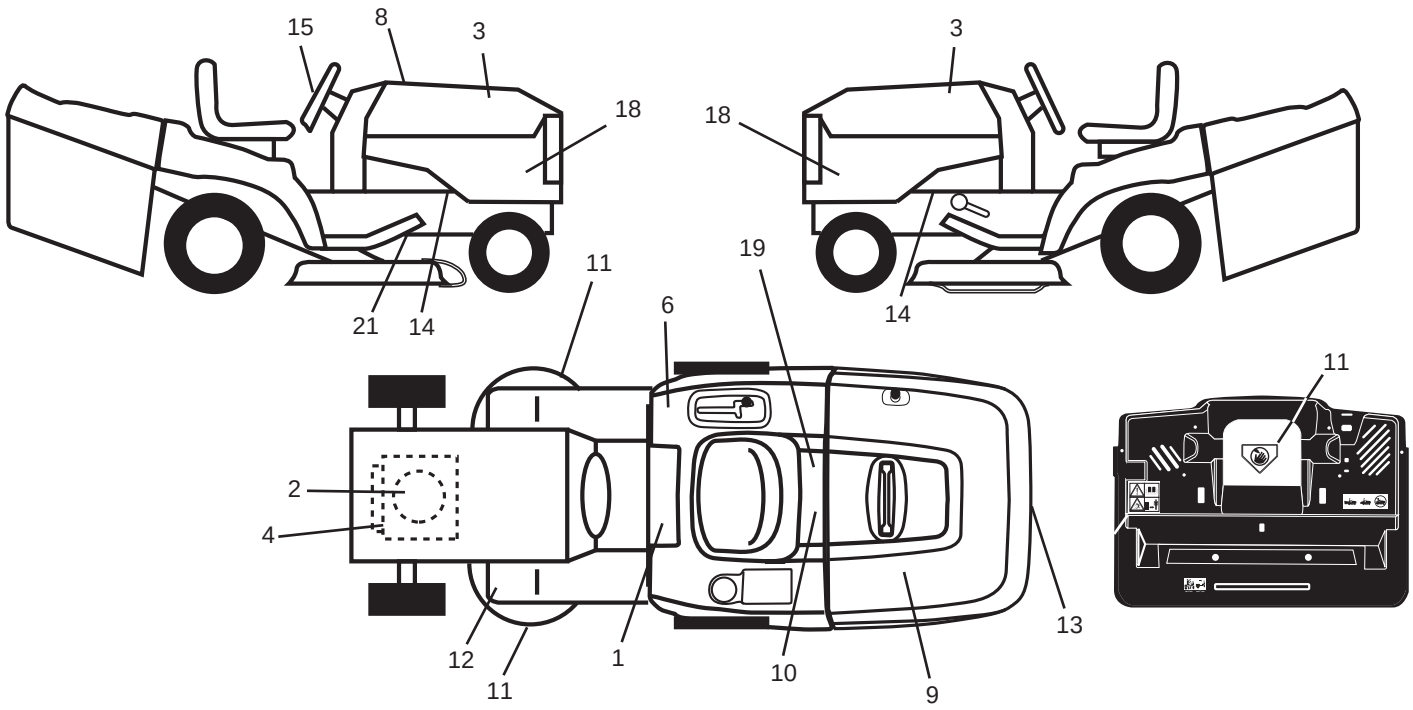

KEY NO.	PART NO.	DESCRIPTION
1	532 40 03-89	Decal, Warning Syms. CE
2	532 41 64-73	Decal, Hp Engine
3	532 43 31-31	Decal, Hood RH/LH
4	532 19 68-41	Decal, Warning Eng. Syms.
6	532 18 04-32	Decal, 100 DBA/CE
8	532 41 64-33	Decal, RPL
9	532 18 39-31	Decal, Cover Bagger
10	532 14 50-05	Decal, Bat Dan/Poi P/L Sym Wpn
11	532 18 21-66	Decal, Mower Cut Finger CE
12	532 15 97-37	Decal, Brake/Clutch Symbol Lt
13	532 18 39-30	Decal, Cover/Belt
14	532 15 97-36	Decal, Chassis Hot Muffler
15	532 42 26-85	Decal, Steering Wheel
18	532 42 29-93	Decal, Side Panel
19	532 14 08-37	Decal, Parking Brake Saddle
21	532 16 62-86	Decal, Hex Belt Sch 92 CRD
- -	532 16 69-60	Decal, Bypass
- -	532 18 10-91	Pad Footrest LH
- -	532 18 10-90	Pad Footrest RH
- -	532 43 27-82	Manual Operator's (Euro)
- -	532 43 27-83	Manual Operator's (Scand)
- -	532 43 27-85	Manual Operator's (E-Bloc)
- -	532 43 27-86	Manual Operator's (Baltic)

WHEELS & TIRES

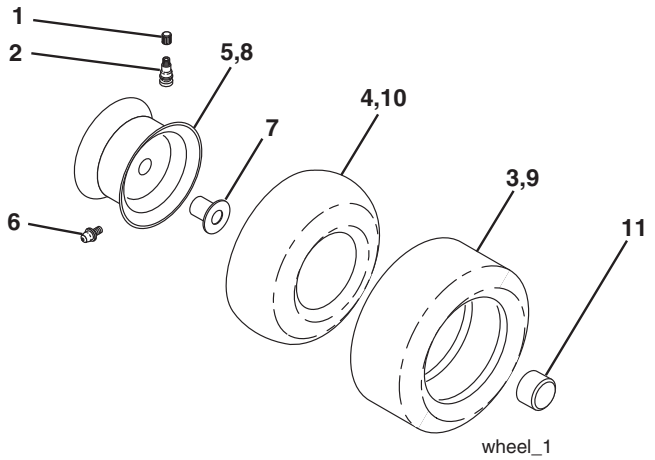

KEY NO.	PART NO.	DESCRIPTION
1	532 05 91-92	Cap Valve Tire
2	532 06 51-39	Stem Valve
3	532 10 62-22	Tire F Ts 15 x 6 0 - 6 Service
4	532 05 99-04	Tube Inner Front #35060
5	532 13 83-36	Rim Asm 6" Front Service
6	532 12 49-57	Fitting Grease
7	532 12 49-59	Bearing Flange
8	532 13 83-37	Rim Asm 8" Rear Service
9	532 12 20-82	Tire R Ts 20 x 10-8 C.Service
10	532 12 49-26	Tube Rear 9 5 x 8 Service
11	532 17 50-39	Cap Axle Blk 1 50 x 1 00
- -	532 14 43-34	Sealant, Tire (10 oz. tube)

NOTE: All component dimensions given in U.S. inches
1 inch = 25.4 mm

TRACTOR - - MODEL NO. LT2218CMA2 (96061026600), PRODUCT NO. 960 61 02-66
SCHEMATIC 38

SCH20

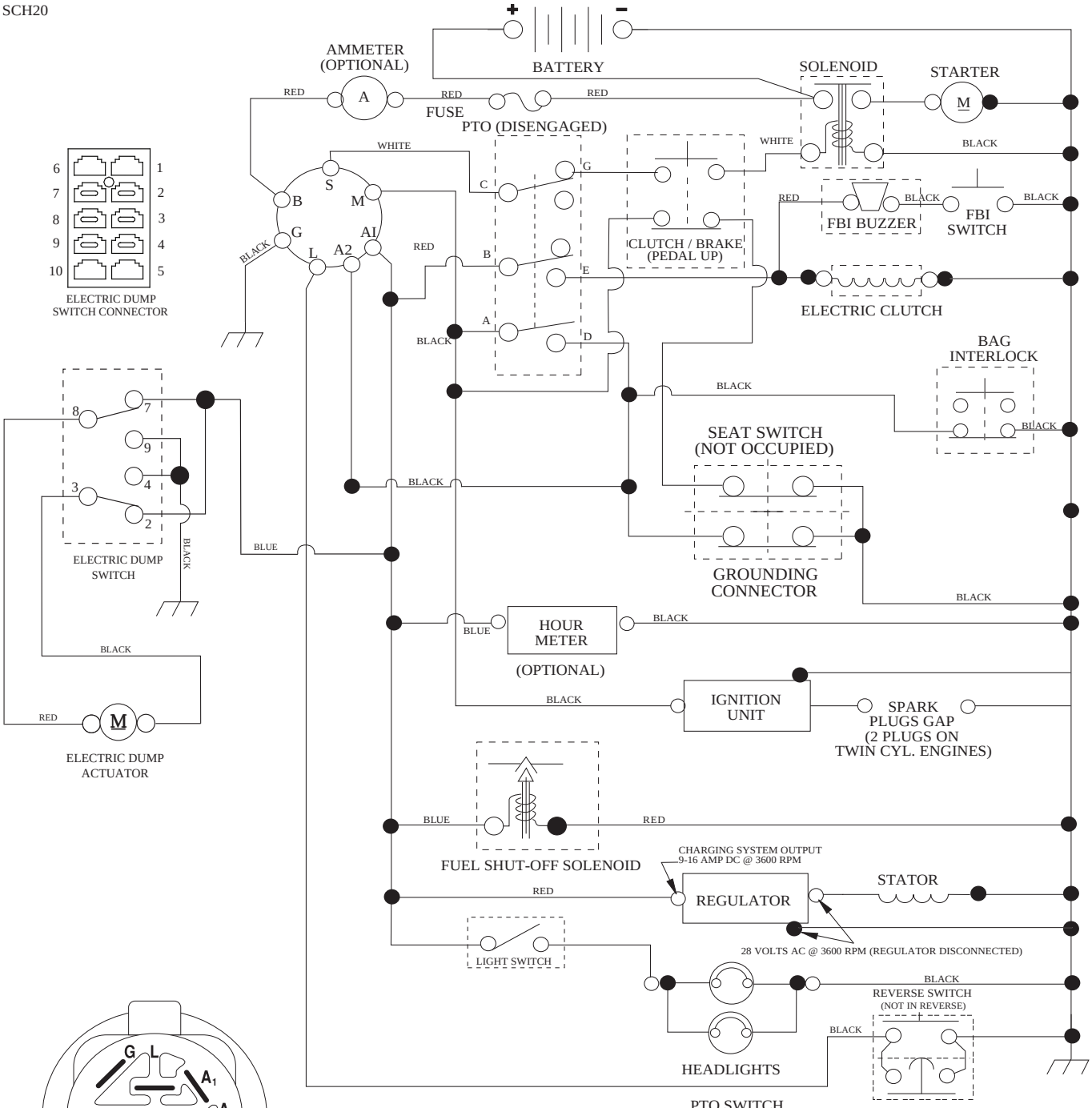

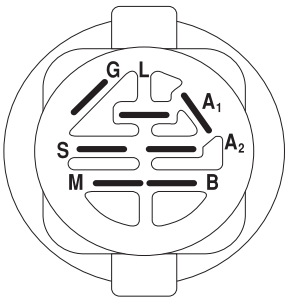

IGNITION SWITCH

POSITION	CIRCUIT "MAKE"
OFF	M+G+A1
RUN/OVERRIDE	B+A1
RUN	B+A1 L+A2
START	B + S + A1

03048

WIRING INSULATED CLIPS
NOTE: IF WIRING INSULATED CLIPS WERE REMOVED FOR SERVICING OF UNIT, THEY SHOULD BE RE-INSTALLED TO PROPERLY SECURE YOUR WIRING.

PTO SWITCH

POSITION	CIRCUIT
OFF	C + G, B + H
ON	C + F, B + E, A + D

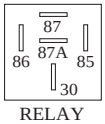

RELAY

NON-REMOVABLE CONNECTIONS

REMOVABLE CONNECTIONS

TRACTOR - - MODEL NO. LT2218CMA2 (96061026600), PRODUCT NO. 960 61 02-66
ELECTRICAL 32

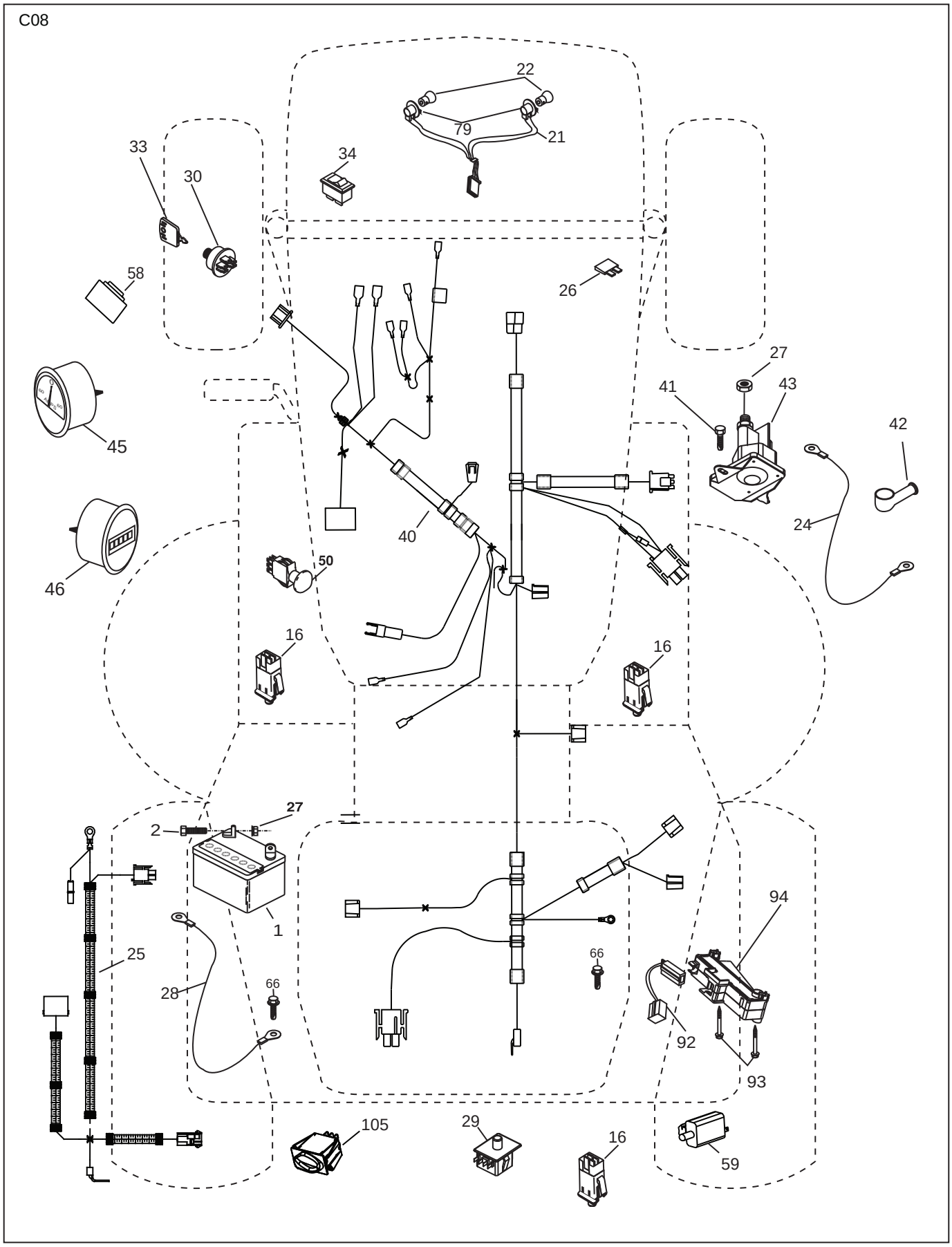

KEY NO.	PART NO.	DESCRIPTION
1	532 16 34-65	Battery
2	874 76 04-12	Bolt Hex Hd 1/4-20 unc x 3/4
16	532 17 61-38	Switch Interlock Push-In
21	532 17 56-88	Harness Asm. Light
22	532 00 41-52	Bulb Light #1156
24	532 42 98-69	Cable Battery ACC. Elect
25	532 42 12-99	Cable Starter 6 Ga. 11" Red
26	532 17 51-58	Fuse 20 Amp
27	873 51 04-00	Nut Keps Hex 1/4-20 unc
28	532 12 77-25	Cable Ground 6 Ga. 18" Black
29	532 19 27-49	Switch Seat
30	532 19 33-50	Switch Ignition
33	532 41 19-35	Key/Chain
34	532 11 07-12	Switch Light/Reset
40	532 43 30-95	Harness Ign
41	871 11 04-08	Bolt Flk Fin Hex 1/4-20 unc x 1/2
42	532 13 15-63	Cover Terminal Red
43	532 19 25-07	Solenoid
45	532 42 29-43	Ammeter
46	532 42 29-44	Hourmeter
50	532 17 46-51	Switch PTO
58	532 16 94-19	Buzzer CRD
59	532 18 03-79	Switch FBI CRD
66	817 49 06-08	Screw Thdrol 3/8-16 x 1/2 Ty-Tt
79	532 17 52-42	Socket Asm. Bulb
92	532 19 66-15	Harness Pigtail
93	532 19 25-40	Screw Plastite 10-14 x 2.0
94	532 19 18-34	Module Reverse ROS
105	532 43 04-44	Switch Rotary

NOTE: All component dimensions given in U.S. inches.
1 inch = 25.4 mm.

TRACTOR - - MODEL NO. LT2218CMA2 (96061026600), PRODUCT NO. 960 61 02-66
CHASSIS AND ENCLOSURES 39

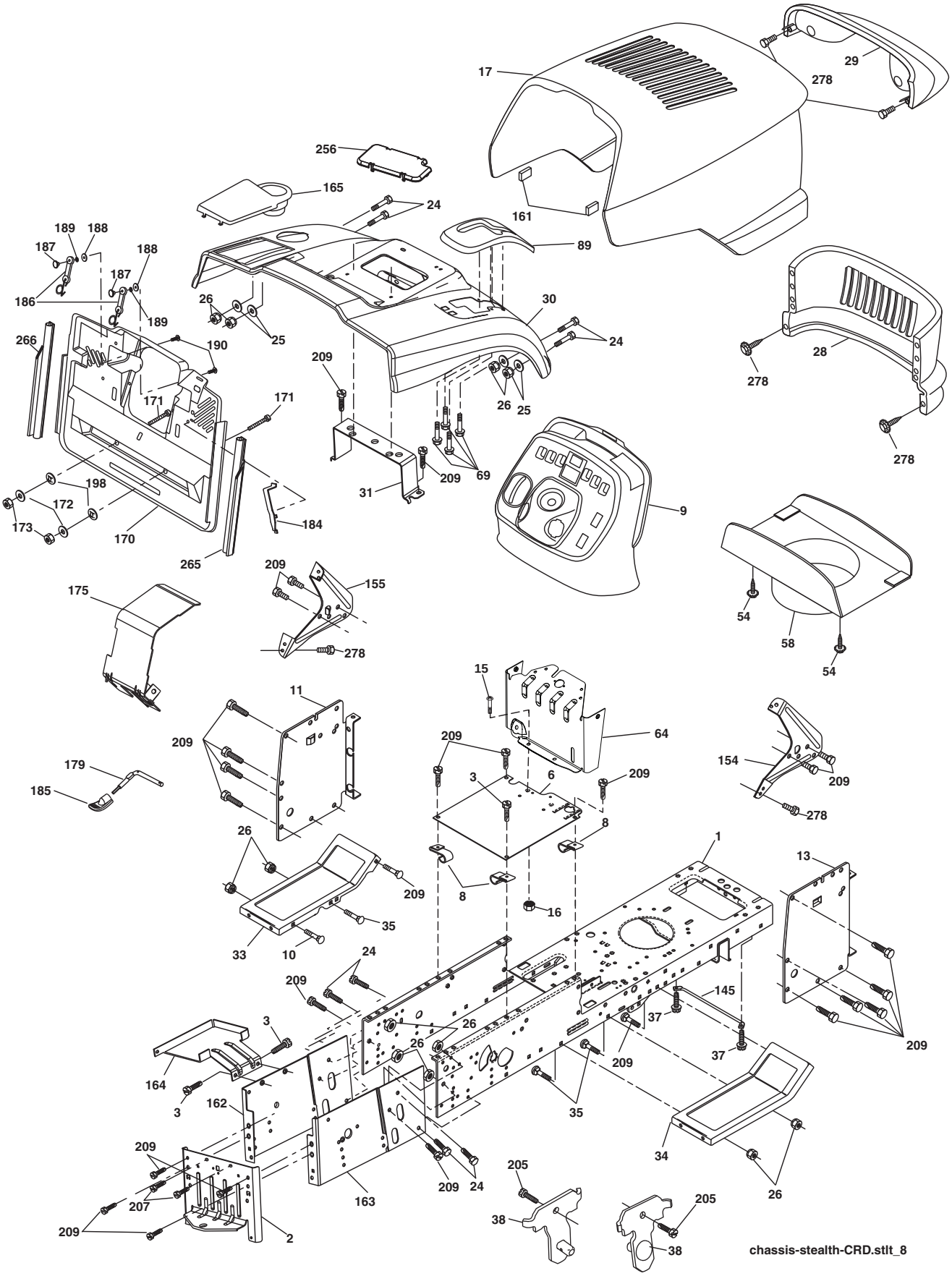

TRACTOR - - MODEL NO. LT2218CMA2 (96061026600), PRODUCT NO. 960 61 02-66
CHASSIS AND ENCLOSURES 39

KEY NO.	PART NO.	DESCRIPTION
1	532 17 46-20	Chassis
2	532 18 03-84	Drawbar
3	817 06 06-12	Screw 3/8-16 x 3/4
6	532 18 44-19	Saddle
8	532 12 64-71	Clip Insulator 13/32 Mtg. Hole
9	532 19 49-28	Dash
10	872 14 06-08	Bolt, Carriage 3/8-16 x 1
11	532 16 72-03	Panel, Dash, LH
13	532 17 82-98	Panel, Asm. Dash RH
15	874 18 05-12	Screw Machine THD 5/16-18 unc x 3/4
16	873 51 05-00	Nut Keps 5/16-18 unc
17	532 18 13-51	Hood
24	874 78 06-16	Bolt
25	819 13 13-12	Washer 13/32 x 13/16 x 12 Ga.
26	873 80 06-00	Nut
28	532 42 07-24	Grille
29	532 16 18-40	Lens, Bar
30	532 19 73-44	Fender
31	532 16 51-56	Bracket, Fender Support
33	532 18 11-93	Footrest, LH
34	532 18 11-94	Footrest, RH
35	872 11 06-06	Bolt
37	817 49 05-08	Screw Thdrol 5/16-18 x 1/2 TYT
38	532 18 17-48	Bracket Asm Pivot Mower Rear
54	532 19 25-12	Screw Hex WsHd 10-32 x 5/8
58	532 17 53-51	Duct Air Engine
64	532 19 93-95	Bracket, Lower dash
69	532 14 24-32	Screw Hex Wsh
89	532 19 73-66	Console
145	532 40 91-67	Rod Pivot Hood
154	532 18 39-25	Bracket, RH Dash
155	532 18 39-26	Bracket, LH Dash
161	532 16 46-55	Bumper Extrussion
162	532 18 03-82	Bracket Exten Chassis LH CRD
163	532 18 03-83	Bracket Exten Chassis RH CRD
164	532 16 56-05	Support Battery CRD
165	532 43 25-07	Cover Battery
170	532 19 94-88	Backplate CRD
171	872 14 06-20	Bolt Rdhd Sqnk 3/8-16 x 2-1/2 Gr. 5
172	819 13 20-16	Washer 13/32 x 1-1/4 x 16 Ga.
173	873 51 06-00	Nut, Keps Hex 3/8-16 unc
175	532 18 82-03	Guard Trap
179	532 18 82-02	Rod Pivot FBI CRD
184	532 17 46-62	Bracket Actuator Bagger CRD
185	532 18 11-01	Knob Rod Brake Parking
186	532 16 07-93	Latch Asm Mulch/Bagger
187	532 12 50-04	Nut Weld
188	819 06 12-16	Washer #10
189	810 07 10-00	Washer Lock #10
190	871 08 10-10	Screw Pan Hd Phillip 10-24 x 5/8
198	532 16 89-37	Nut, Push
205	817 49 06-08	Screw Thdrol 3/8-16 x 1/2
207	817 67 05-08	Screw Thdrol 5/16-18 x 1/2
209	817 00 06-12	Screw Hex Wsh Thdrol 3/8-16
256	532 18 13-61	Cover Fender Rack CRD
265	532 18 57-04	Seal Side RH Bagger
266	532 18 57-03	Seal Side LH Bagger
278	532 41 63-58	Screw #10 x 0.750 BOS Thread

NOTE: All component dimensions given in U.S. inches. 1 inch = 25.4 mm.

TRACTOR - - MODEL NO. LT2218CMA2 (96061026600), PRODUCT NO. 960 61 02-66
DRIVE 40

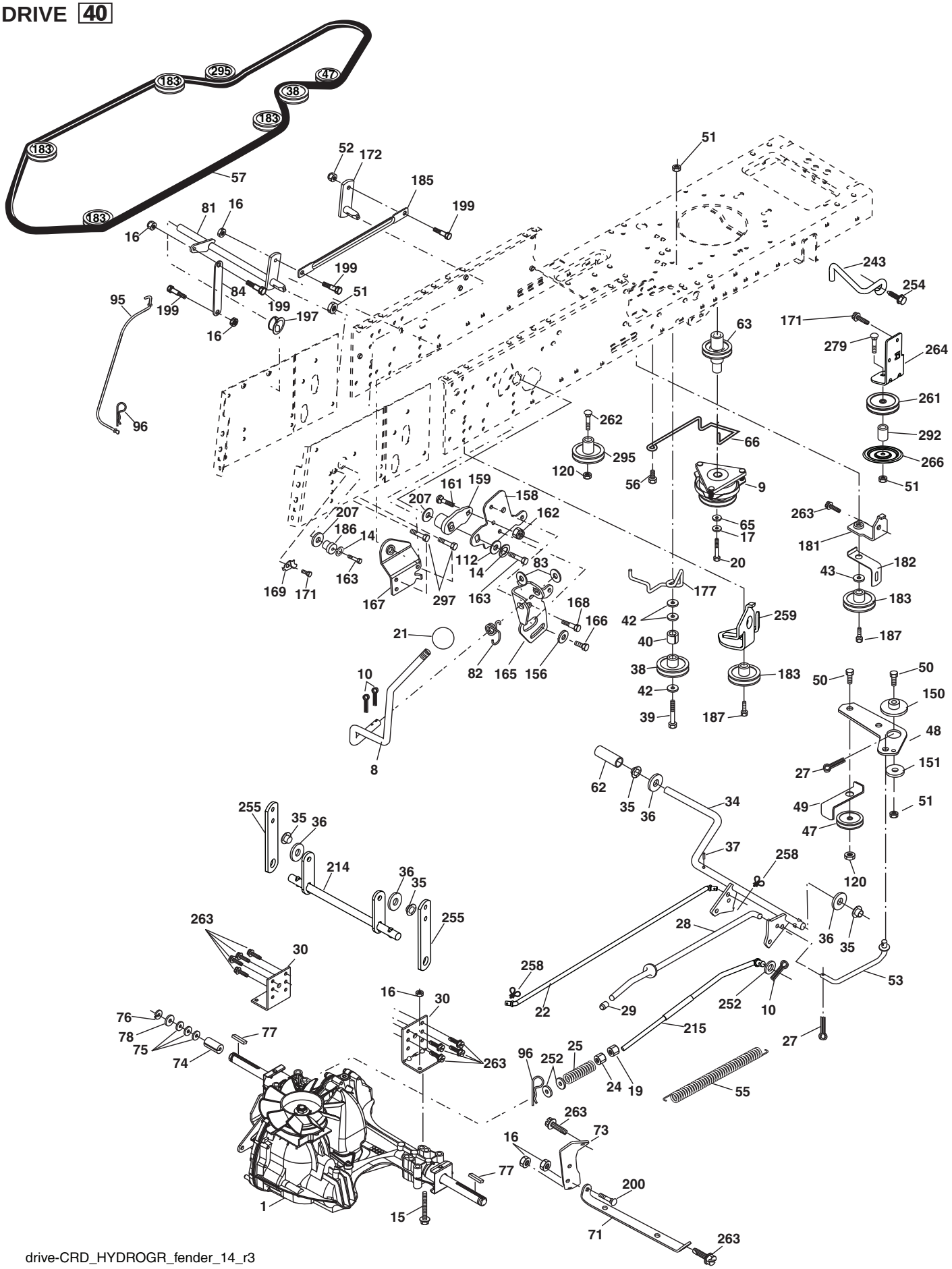

drive-CRD_HYDROGR_fender_14_r3

TRACTOR - - MODEL NO. LT2218CMA2 (96061026600), PRODUCT NO. 960 61 02-66
DRIVE 40

KEY NO.	PART NO.	DESCRIPTION
1	- - - - - - -	Transaxle Hydro Gear 321-0510
8	532 19 27-06	Rod, Shift Fender Adjust Lt
9	532 19 81-43	Clutch Ele OGURA
10	876 02 04-16	Pin, Cotter 1/8 x 1
14	810 04 04-00	Washer, Lock Hvy Helical
15	874 49 05-44	Bolt Hex FGHD 5/16-18 x Gr. 5
16	873 80 05-00	Nut, Lock Hex w/Ins 5/16-18 unc
17	532 12 61-97	Washer 1-1/2 OD x 15/32 ID x .250
19	873 80 06-00	Nut Lock Hex w/Insert 3/8-16 unc
20	532 17 39-37	Bolt, Hex 7/16-20 x 4
21	532 13 05-64	Knob Deluxe
22	532 17 56-07	Rod, Brake
24	873 35 06-00	Nut
25	532 19 20-36	Spring, Rod, Brake
27	876 02 04-12	Pin, Cotter 1/8 x 3/4
28	532 17 57-65	Rod, Parking Brake
29	532 07 16-73	Cap, Parking Brake
30	532 16 95-92	Bracket, Mfg. Transaxle
34	532 17 55-78	Shaft, Asm Pedal Foot CRD
35	532 12 01-83	Bearing, Nylon
36	819 21 16-16	Washer 21/32 x 1 x 16 Ga.
37	532 12 49-63	Pin, Roll 3/16 x 1"
38	532 16 59-36	Pulley Flat Composite 3.06"
39	874 76 06-44	Bolt Fin Hex 3/8-16 unc x 2-3/4
40	532 12 49-65	Spacer, Split 395 x 59 Bzp
42	819 13 13-12	Washer 13/32 x 13/16 x 12 Ga.
43	819 11 10-12	Washer 11/32 x 5/8 x 12 Ga.
47	532 12 77-83	Pulley, Idler, V Groove Plastic
48	532 15 44-07	Bellcrank Clutch Grnd Drv
49	532 12 32-05	Retainer, Belt Style Spring
50	872 11 06-12	Bolt Carr. Sh. 3/8-16 x 1-1/2 Gr. 5
51	873 68 06-00	Nut, Crownlock 3/8-16 unc
52	873 68 05-00	Nut Crownlock 5/16-18
53	532 19 96-52	Link, Clutch 7.66
55	532 10 57-09	Spring, Return, Clutch
56	817 06 06-20	Screw 3/8-16 x 1-1/4
57	532 17 01-40	V-Belt Kev 112" 0650 CRD
62	532 12 48-72	Cover, Pedal
63	532 18 03-97	Pulley, Engine
65	810 04 07-00	Washer Lock 7/16
66	532 15 47-78	Keeper, Belt Engine F-Proof
71	532 16 91-83	Strap, Torque, LH
73	532 16 91-82	Strap, Torque, RH
74	532 13 70-57	Spacer, Split
75	532 12 17-49	Washer 25/32 x 1-1/4 x 16 Ga.
76	812 00 00-01	Ring, E
77	532 12 35-83	Key, Square
78	532 12 17-48	Washer 25/32 x 1-5/8 x 16 Ga.
81	532 17 00-06	Asm, Shaft
82	532 16 57-11	Spring, Torsion
83	819 17 12-16	Washer 17/32 x 3/4 x 16 Ga.
84	532 17 00-07	Link, Transaxle
95	532 17 00-15	Control Asm Bypass Hydro
96	532 12 47-88	Spring, Retainer 1”
112	819 09 12-10	Washer 9/32 x 3/4 x 10 Ga.
120	873 90 06-00	Nut Lock Flg. 3/8-16 unc
150	532 16 58-50	Bushing, Bellcrank Grnd Dr
151	819 13 32-10	Washer 13/32 x 2 x 10 Ga.
156	532 16 60-02	Washer Srrted 5/16 ID x 1.125
158	532 16 55-89	Bracket Shift Mount
159	532 18 39-00	Hub Tapered Flange Shift Lt
161	872 14 04-06	Bolt Rdhd Sqnk 1/4-20 x 3/4 Gr. 5
162	873 68 04-00	Nut Crownlock 1/4-20 unc
163	874 78 04-16	Bolt Hex Fin 1/4-20 unc x 1 Gr. 5
165	532 16 56-23	Bracket Pivot Lever
166	817 49 05-10	Screw 5/16-18 x 5/8
167	532 16 55-88	Bracket Support Shift CRD
168	532 16 54-92	Bolt Shoulder 5/16-18 x .561
169	532 16 55-80	Plate Fastening Lt
171	817 49 06-08	Screw Thdrol 3/8-16 x 1/2 Ty-Tt
172	532 17 02-71	Shaft Asm Shifter Frt CRD
177	532 16 59-32	Keeper Flat Idler 3.06" CRD
181	532 18 02-11	Bracket Idler Ground Drive CRD
182	532 18 26-82	Keeper Belt 2.5" Od V-Idler CRD
183	532 19 95-34	Pulley V-Idler CRD
185	532 17 00-08	Link Shift
186	532 16 56-14	Hub Tapered Round CRD
187	817 58 05-20	Screw Thdrol 5/16-18 x 1.25
197	532 16 96-13	Nyliner Snap-In 5/8
199	532 16 96-12	Bolt Shoulder 5/16-18 unc
200	872 14 05-08	Bolt RDHD SQNK 5/16-18 x 1
207	532 16 98-45	Washer Nylon Rear
214	532 17 56-09	Shaft Asm. Brake
215	532 17 56-52	Rod Brake Hydro
243	532 19 07-36	Bracket Anti Rotation
252	819 13 16-16	Washer 13/32 x 1 x 16 Ga.
254	817 00 06-16	Screw 3/8-16 x 1
255	532 17 56-08	Brace Shaft Brake Mtg.
258	532 17 80-62	Clip Retainer
259	532 18 02-12	Bracket Pulley
261	532 13 14-94	Pulley Idler Flat
262	872 11 06-22	Bolt Rdhd 3/8-16 unc x 2-3/4 Gr. 5
263	817 00 06-12	Screw Hx Wsh Thdrol 3/8-16 x 3/4
264	532 19 76-07	Bracket Idler Chassis
266	532 18 20-61	Shield Idler
279	872 11 06-16	Bolt Rdhd Sqnk 3/8-16 unc x 2
292	532 40 02-71	Spacer Noram
295	532 17 91-14	Pulley Idler Composite
297	817 49 06-10	Screw HXWSH THDR. 3/8-16 x 5/8

NOTE: All component dimensions given in U.S. inches
1 inch = 25.4 mm

TRACTOR - - MODEL NO. LT2218CMA2 (96061026600), PRODUCT NO. 960 61 02-66
STEERING ASSEMBLY 41

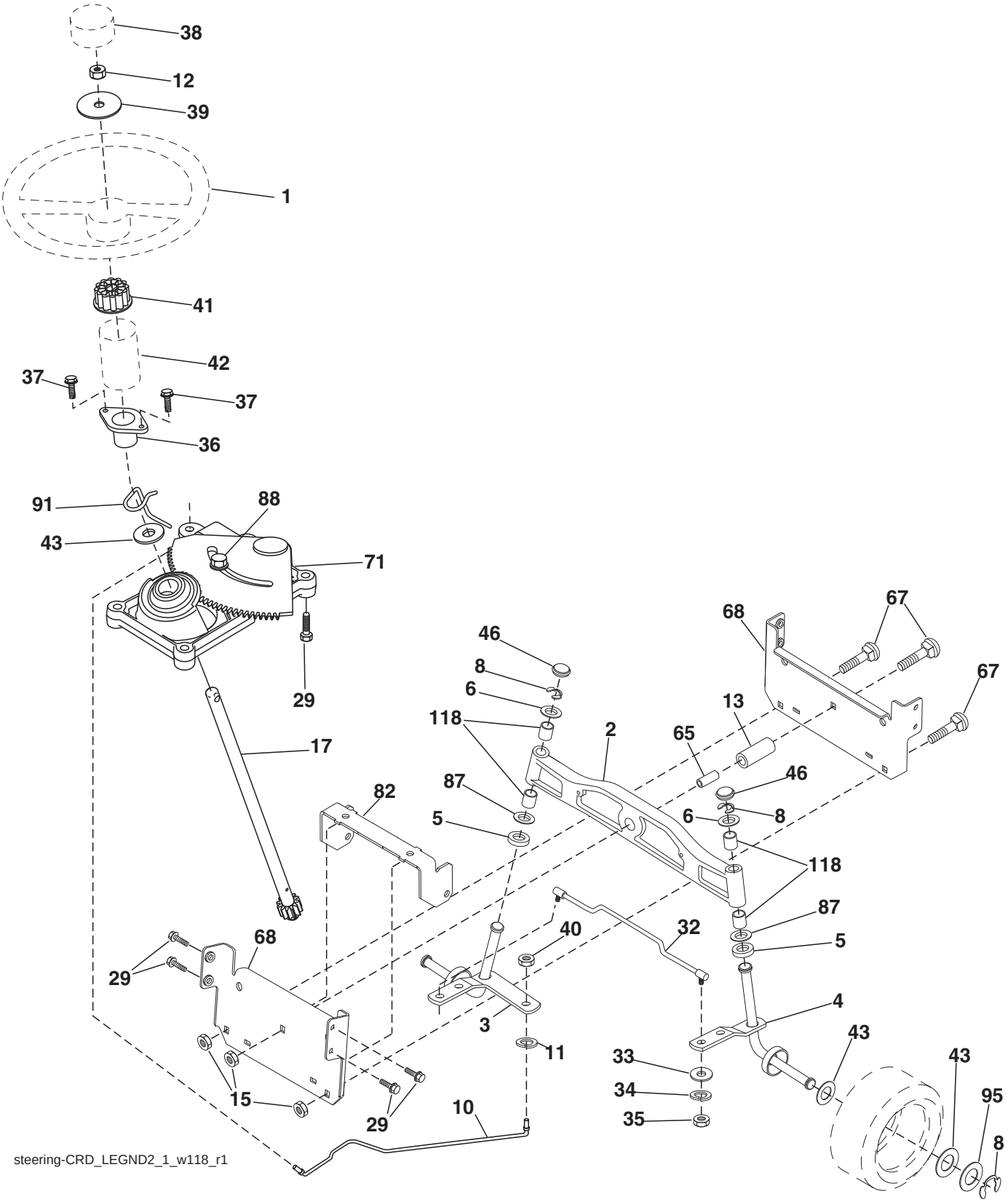

TRACTOR - - MODEL NO. LT2218CMA2 (96061026600), PRODUCT NO. 960 61 02-66
STEERING ASSEMBLY 41

KEY NO.	PART NO.	DESCRIPTION
1	532 42 41-46	Steering Wheel
2	532 19 35-42	Cast Iron Axle Assembly
3	532 16 98-40	Spindle Assembly, LH
4	532 16 98-39	Spindle Assembly, RH
5	532 12 49-31	Bearing, Race, Thrust, Hardened
6	532 12 17-48	Washer 25/32 x 1-5/8 x 16 Ga.
8	812 00 00-29	Ring, Klip
10	532 17 51-21	Link, Drag
11	810 04 06-00	Washer, Lock
12	873 94 08-00	Nut Hex Jam Toplock 1/2-20 unf
13	532 13 65-18	Spacer Brg Axle Front
15	532 14 52-12	Nut, Hexflange Lock
17	532 17 78-83	Shaft Assembly, Steering
29	817 00 06-12	Screw, 3/8-16 x 3/4
32	532 17 18-88	Rod, Tie
33	819 11 12-16	Washer 11/32 x 3/4 x 16 Ga.
34	810 04 05-00	Washer Lock Hvy Hlcl Spr 5/16
35	873 54 05-00	Nut Crownlock 5/16-24 unf
36	532 15 51-05	Bushing, Steering
37	532 15 29-27	Screw TT #I0-32 x 5 x 3/8 Flange
38	532 42 41-47	Cap Wheel Steering
39	819 18 38-12	Washer 9/16 x 2-3/8 12 Ga.
40	873 54 06-00	Nut Crownlock 3/8-24
41	532 18 67-37	Adaptor, Steering Wheel
42	532 17 71-49	Boot, Steering
43	532 12 17-49	Washer 25/32 x 1-1/4 x 16 Ga.
46	532 12 12-32	Cap, Spindle
65	532 41 47-36	Spacer Brace Axle
67	872 11 06-18	Bolt Rdhd Sq 3/8-16 unc x 2-1/4
71	532 17 51-46	Steering Asm.
68	532 16 98-27	Brace Axle
82	532 19 99-78	Bracket Susp Chassis Front
87	532 17 39-66	Washer Flat .781 x 1-1/2 x .14
88	532 17 51-18	Bolt Shoulder 7/16-20 unc
91	532 17 55-53	Clip Steering
95	532 18 89-67	Washer Harden .793 x 1.637 x 060
118	532 40 60-13	Bushing

NOTE: All component dimensions given in U.S. inches. 1 inch = 25.4 mm.

TRACTOR - - MODEL NO. LT2218CMA2 (96061026600), PRODUCT NO. 960 61 02-66
ENGINE 24

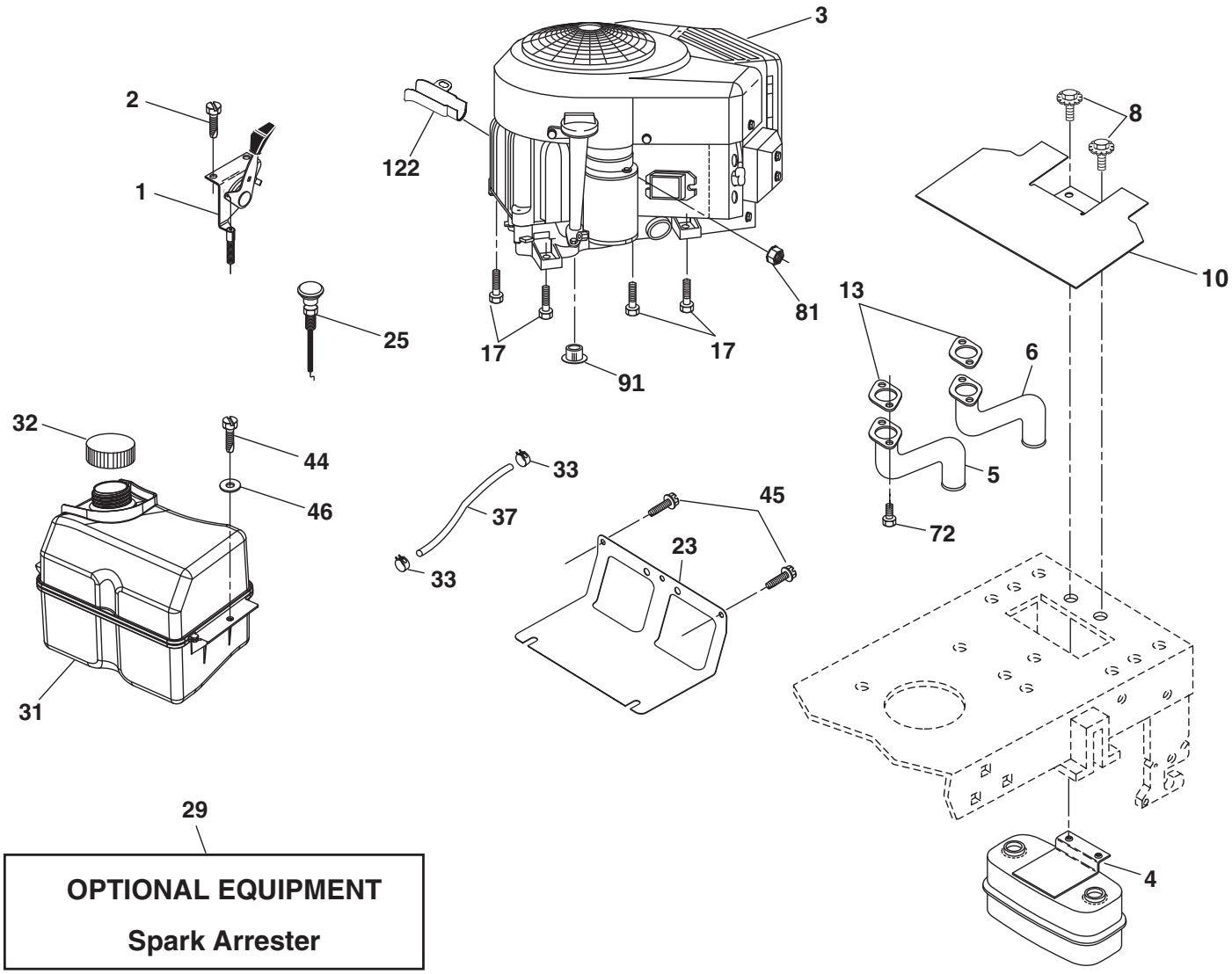

OPTIONAL EQUIPMENT

Spark Arrester

Engine-CRD_BS-2cyl_8

KEY NO.	PART NO.	DESCRIPTION
1	532 17 83-85	Control Throt/Ch
2	532 41 63-58	Screw #10 x 0.750 BOS Thread
3	- - - - - - - -	Engine B&S Model 405577-1220-B1
4	532 14 97-23	Muffler Exhaust B&S LT
5	532 16 05-89	Exhaust Tube RH
6	532 15 99-55	Exhaust Tube LH
8	532 17 18-77	Bolt 5/16-18 unc x 3/4
10	532 14 66-29	Shield Browning
13	532 16 53-91	Gasket
17	817 06 06-20	Screw 3/8-16 x 1-1/4
23	532 16 98-37	Shield Browning/Debris Guard
25	532 19 15-96	Control Choke
29	532 13 71-80	Arrestor Spark
31	532 40 75-51	Tank Fuel
32	532 43 02-20	Cap Asm Fuel
33	532 12 34-87	Clamp Hose Blk
37	532 13 70-40	Line Fuel 20"
44	817 67 04-12	Screw Hexwsh Thdrol 3/8-16 x 3/4
45	817 00 06-12	Screw 3/8-16 x 3/4
46	819 09 14-16	Washer 9/32 x 7/8 x 16 Ga.
72	532 18 39-06	Screw Socket Head 5/16-18 x 1
81	873 51 04-00	Nut Keps Hex 1/4-20 unc
91	532 18 74-95	Bushing 1.375 OD
122	532 42 19-22	Extension Drain Oil

NOTE: All component dimensions given in U.S. inches
1 inch = 25.4 mm

Engine Power Rating Information

The gross power rating for individual gas engine models is labeled in accordance with SAE (Society of Automotive Engineers) code J1940 (Small Engine Power & Torque Rating Procedure), and rating performance has been obtained and corrected in accordance with SAE J1995 (Revision 2002-05). Torque values are derived at 3060 RPM; horsepower values are derived at 3600 RPM. Actual gross engine power will be lower and is affected by, among other things, ambient operating conditions and engine-to-engine variability. Given both the wide array of products on which engines are placed and the variety of environmental issues applicable to operating the equipment, the gas engine will not develop the rated gross power when used in a given piece of power equipment (actual “on-site” or net power). This difference is due to a variety of factors including, but not limited to, accessories (air cleaner, exhaust, charging, cooling, carburetor, fuel pump, etc.), application limitations, ambient operating conditions (temperature, humidity, altitude), and engine-to-engine variability. Due to manufacturing and capacity limitations, Briggs & Stratton may substitute an engine of higher rated power for this Series engine.

TRACTOR - - MODEL NO. LT2218CMA2 (96061026600), PRODUCT NO. 960 61 02-66
MOWER DECK 44

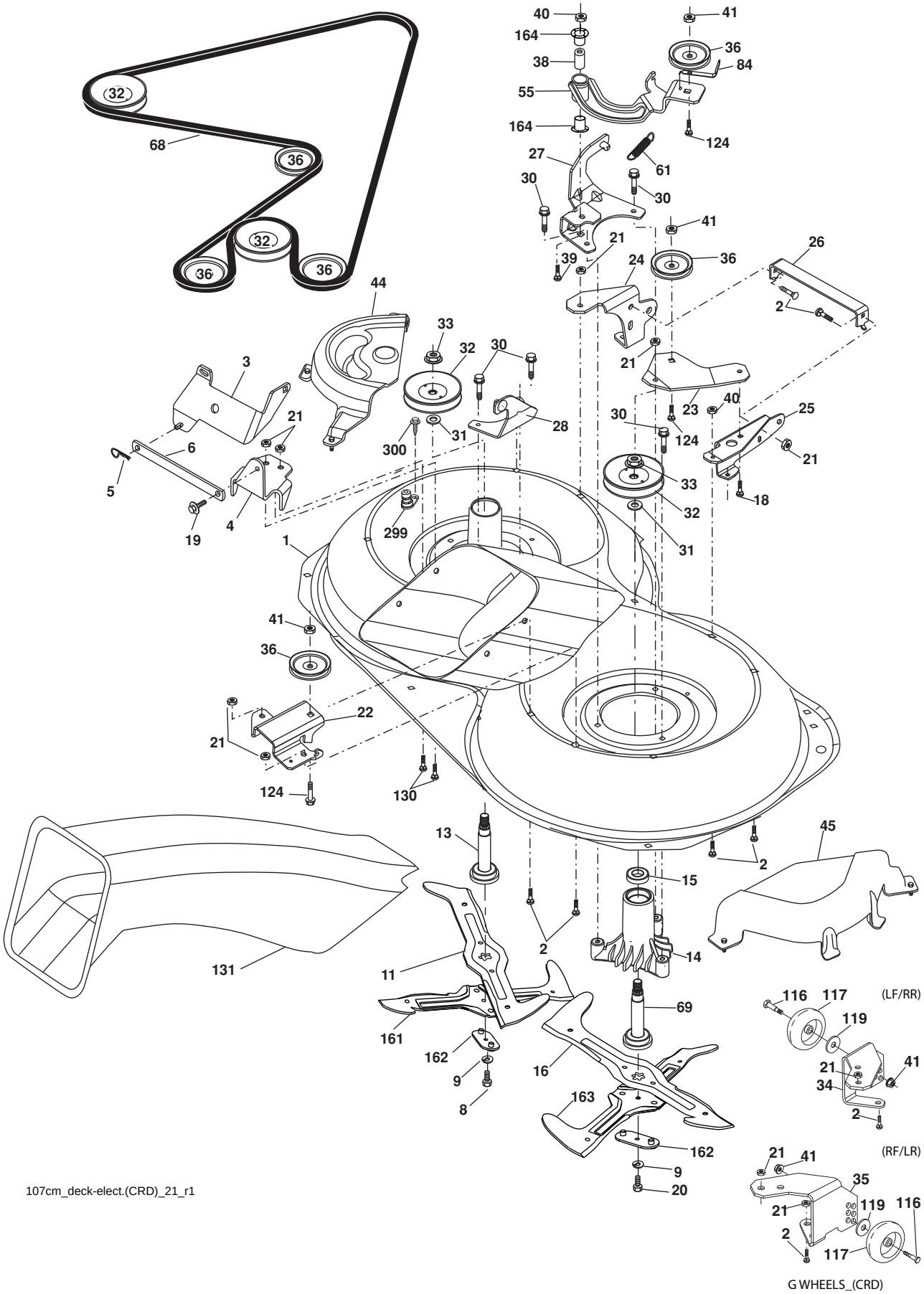

TRACTOR - - MODEL NO. LT2218CMA2 (96061026600), PRODUCT NO. 960 61 02-66
MOWER DECK 44

KEY NO.	PART NO.	DESCRIPTION
1	532 16 91-60	Housing Asm. Mower
2	872 14 05-06	Bolt Rdhd Sqnk 5/16-18 unc x 3/4
3	532 43 18-64	Bracket Asm. S-Bar Chass
4	532 16 91-67	Bracket Bar Sway Deck
5	532 12 46-70	Retainer Spring
6	532 16 55-57	Bar Sway
8	532 18 17-12	Bolt 3/8-24 x 1.25 Gr. 8 Patched
9	810 03 06-00	Washer Lock Hvy 3/8 Unplated
11	532 18 05-83	Blade 3-1 LH
13	532 13 76-45	Shaft Asm. w/Lower Bearing
14	532 12 87-74	Housing Mandrel Vented (Machd)
15	532 11 04-85	Bearing Ball Mandrel
16	532 18 05-84	Blade 3-1 RH
18	872 11 06-06	Bolt Rdhd Sqnk 3/8-16 x 3/4 Gr. 5
19	532 13 28-27	Bolt Shoulder 5/16-18 Thd Form
20	532 18 17-13	Bolt 3/8-24 x 1.25 Gr. 8 Ptch LH Thd
21	873 68 05-00	Nut Crown Lock 5/16-18
22	532 16 91-65	Bracket Idler Sprt RR
23	532 16 91-66	Bracket Idler Sprt RF
24	532 41 34-36	Bracket Suspension LH
25	532 40 01-05	Bracket Suspension RF
26	532 40 01-10	Brace Susp Frt CRD
27	532 16 91-72	Bracket Asm. Susp RR
28	532 16 91-68	Bracket Asm. Susp LR
30	532 17 39-84	Screw Thd Rolling Dod. PT Hex
31	532 18 76-90	Washer Spacer Mower Vented
32	532 19 81-45	Mandrel Pulleys
33	532 40 02-34	Nut Flg Top Lock
34	532 40 01-03	Bracket Gauge Wheel LF
35	532 40 01-04	Bracket Gauge Wheel RF
36	532 14 67-63	Pulley Idler V-Groove Dim 4.25
38	532 16 98-51	Spacer Hub Arm Idler
39	872 11 06-22	Bolt RH Hd 3/8-16 unc x 2-3/4 Gr. 5
40	873 68 06-00	Nut Crownlock 3/8-16 unc
41	873 90 06-00	Nut Flangelock 3/8-16 unc
44	532 43 27-73	Cover Mandrel LH
45	532 43 27-72	Cover Mandrel RH
55	532 16 98-49	Arm Idler
61	532 19 94-87	Spring Tension Belt
68	532 40 20-09	Belt Drive
69	532 16 54-82	Shaft Asm w/Lwr Brg RH Thd CRD
84	532 15 60-85	Keeper Belt Idler
116	532 19 34-06	Bolt Shoulder
117	532 17 48-73	Wheel Gauge
119	819 13 20-12	Washer 13/32 x 1-1/4 x 12 Ga.
124	872 11 06-12	Bolt Carr Sh 3/8-16 x 1-1/2 Gr. 5
130	872 11 05-06	Bolt Rdhdsqnk 5/16-18 unc x 3/4
131	532 16 56-61	Chute Bagger CRD 92cm
161	532 18 04-24	Blade Cross LH 107
162	532 18 08-78	Adapter Weldment Blade 107
163	532 18 04-25	Blade Cross RH 107
164	532 12 49-37	Bearing
299	532 41 55-98	Port Washout
300	532 15 29-27	Screw TT #10-32.5. 3/8 Flange
--	532 18 18-57	Mandrel Assembly (Includes housing, shaft assembly, and bearing only - pulley/nut/washer and blade bolt/washers not included)
--	532 18 18-58	Mandrel Asm CRD LH Threads VC
--	532 43 23-01	Replacement Mower Complete

NOTE: All component dimensions given in U.S. inches
1 inch = 25.4 mm

TRACTOR - - MODEL NO. LT2218CMA2 (96061026600), PRODUCT NO. 960 61 02-66
MOWER LIFT 45

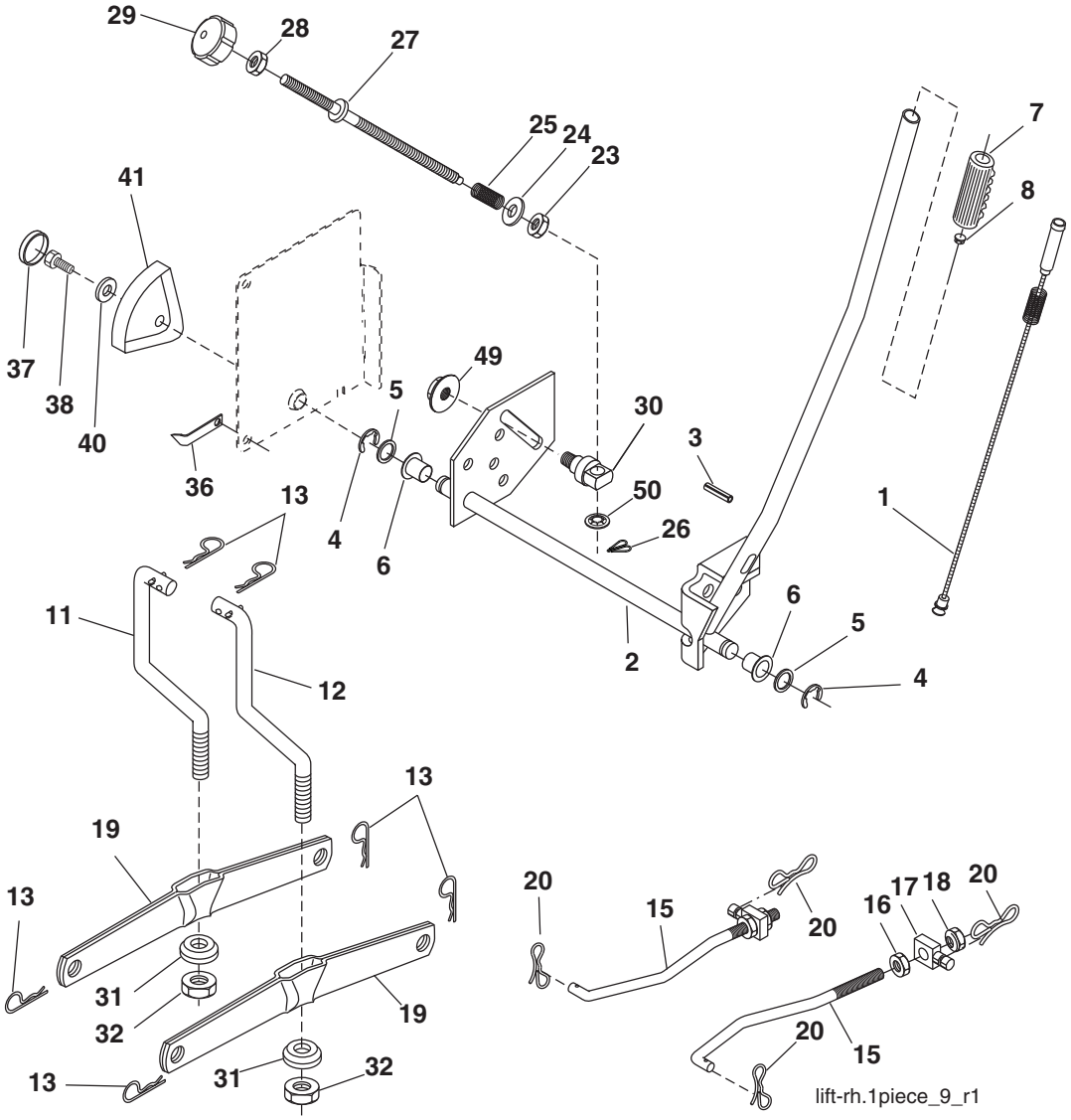

KEY NO.	PART NO.	DESCRIPTION
1	532 40 50-07	Plunger Asm. Lift
2	532 19 80-70	Shaft Asm. Lift
3	532 18 88-22	Pin Groove
4	812 00 00-02	E Ring #5133-62
5	819 21 16-21	Washer 21/32 x 1 x 21 Ga.
6	532 12 01-83	Bearing Nylon
7	532 12 56-31	Grip Handle Fluted
8	532 12 45-26	Button Plunger Black
11	532 16 58-29	Link Asm Lift LH
12	532 16 58-31	Link Asm Lift RH
13	532 12 46-70	Retainer Spring
15	532 17 32-88	Link Front
16	873 35 08-00	Nut Jam Hex 1/2-13 unc
17	532 17 56-89	Trunnion Blk Zinc
18	873 80 08-00	Nut Lock w/Wsh 1/2-13 unc
19	532 13 98-68	Arm Suspension Mower
20	532 19 42-09	Pin Cotter 7/16 Bow Tie Lock
23	532 11 08-07	Nut Special
24	819 13 10-16	Washer 13/32 x 5/8 x 16 Ga.

KEY NO.	PART NO.	DESCRIPTION
25	532 16 40-24	Spring Compression
26	532 16 94-84	Retainer Clip
27	532 16 45-43	Rod Adj Lift
28	873 35 06-00	Nut Hex Jam 3/8-16 unc
29	532 13 80-57	Knob
30	532 15 02-33	Trunnion Infin Height
31	532 16 98-65	Bearing, Pvt. Lift.
32	873 54 06-00	Nut Crownlock 3/8-24
36	532 15 50-97	Pointer Height Indicator
37	532 12 39-35	Plug Hole Blk 1.485/1.515 Dia
38	817 06 05-16	Screw 5/16-18 x 1
40	819 11 24-10	Washer 11/32 x 1-1/2 x 10 Ga.
41	532 12 39-34	Scale Ind Height Blk
49	532 14 52-12	Nut Hex Flange Lock
50	532 11 04-52	Nut Push

NOTE: All component dimensions given in U.S. inches
1 inch = 25.4 mm

TRACTOR - - MODEL NO. LT2218CMA2 (96061026600), PRODUCT NO. 960 61 02-66
SEAT ASSEMBLY 42

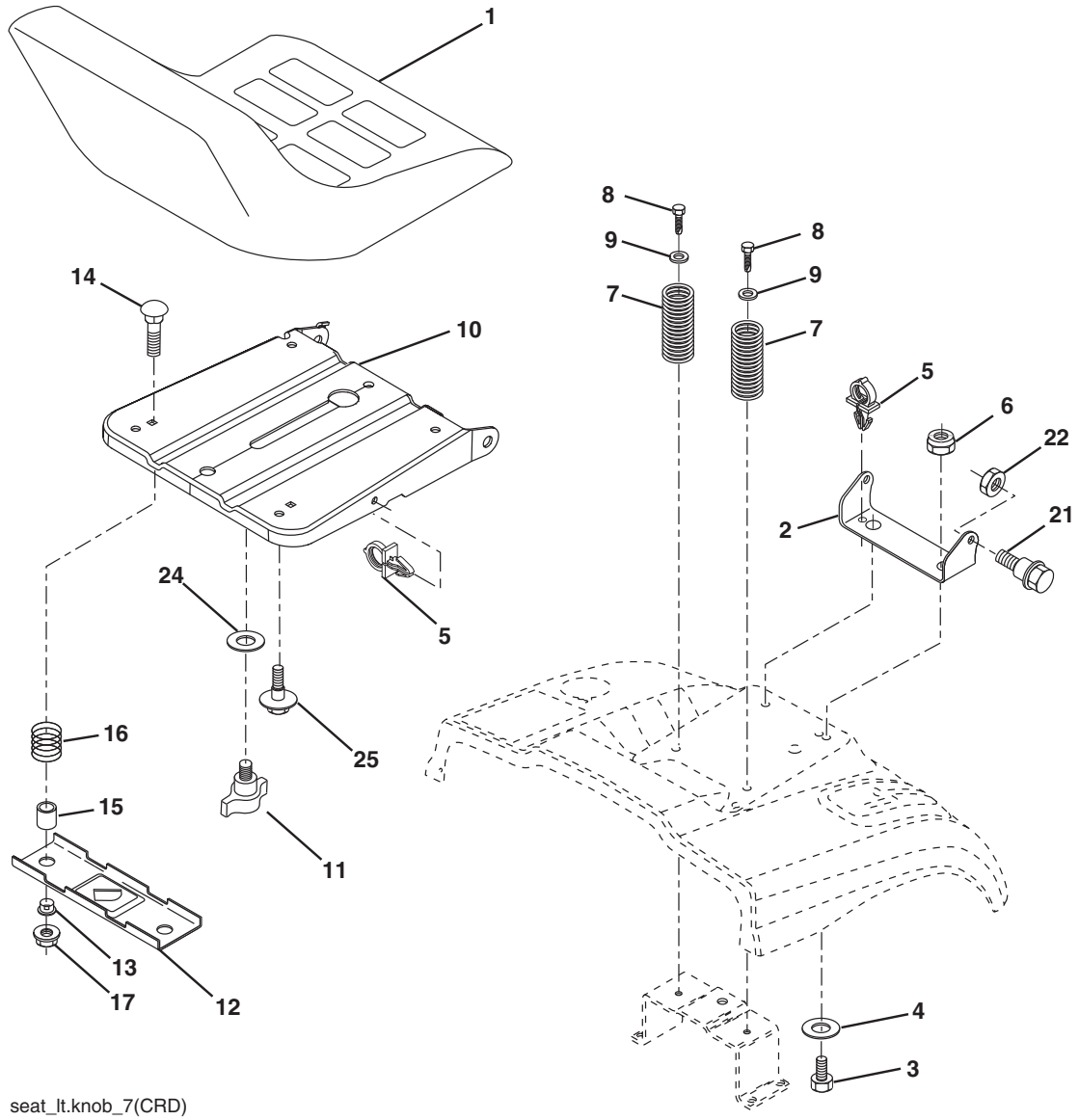

seat_lt.knob_7(CRD)

KEY NO.	PART NO.	DESCRIPTION
1	532 40 10 43	Seat
2	532 14 05-51	Bracket Pnt Pivot Seat (Blk)
3	871 11 06-16	Bolt Fin Hex 3/8-16 unc x 1
4	819 13 16-10	Washer Flat 13/32 x 1 x 10 Ga.
5	532 14 50-06	Clip Push In Hinged
6	873 80 06-00	Nut Lock Hex 3/8-16 unc
7	532 12 41-81	Spring Seat Cprsn 2 250 Blk Zi
8	817 00 06-16	Screw 3/8-16 x 1-1/2
9	819 13 16-14	Washer 13/32 x 1 x 14 Ga.
10	532 19 55-30	Pan Pnt Seat (Blk)
11	532 16 63-69	Knob Seat
12	532 17 46-48	Bracket Pnt Mounting Switch

KEY NO.	PART NO.	DESCRIPTION
13	532 12 12-48	Bushing Snap Blk Nyl 50 Id
14	872 05 04-12	Bolt Rdhd Sht Nk 1/4-20 x 1-1/2
15	532 12 12-49	Spacer Split
16	532 12 37-40	Spring Cprsn
17	532 12 39-76	Nut Lock 1/4 Lge Flg Gr. 5 Zinc
21	532 17 18-52	Bolt Shoulder 5/16-18 unc-2A
22	873 80 05-00	Nut Hex Lock w/Ins 5/16-18
24	819 17 19-12	Washer 17/32 x 1-3/16 x 12 Ga.
25	532 12 70-18	Bolt Shoulder 5/16-18 x .62

NOTE: All component dimensions given in U.S. inches.
1 inch = 25.4 mm

TRACTOR - - MODEL NO. LT2218CMA2 (96061026600), PRODUCT NO. 960 61 02-66
BAGGER 46

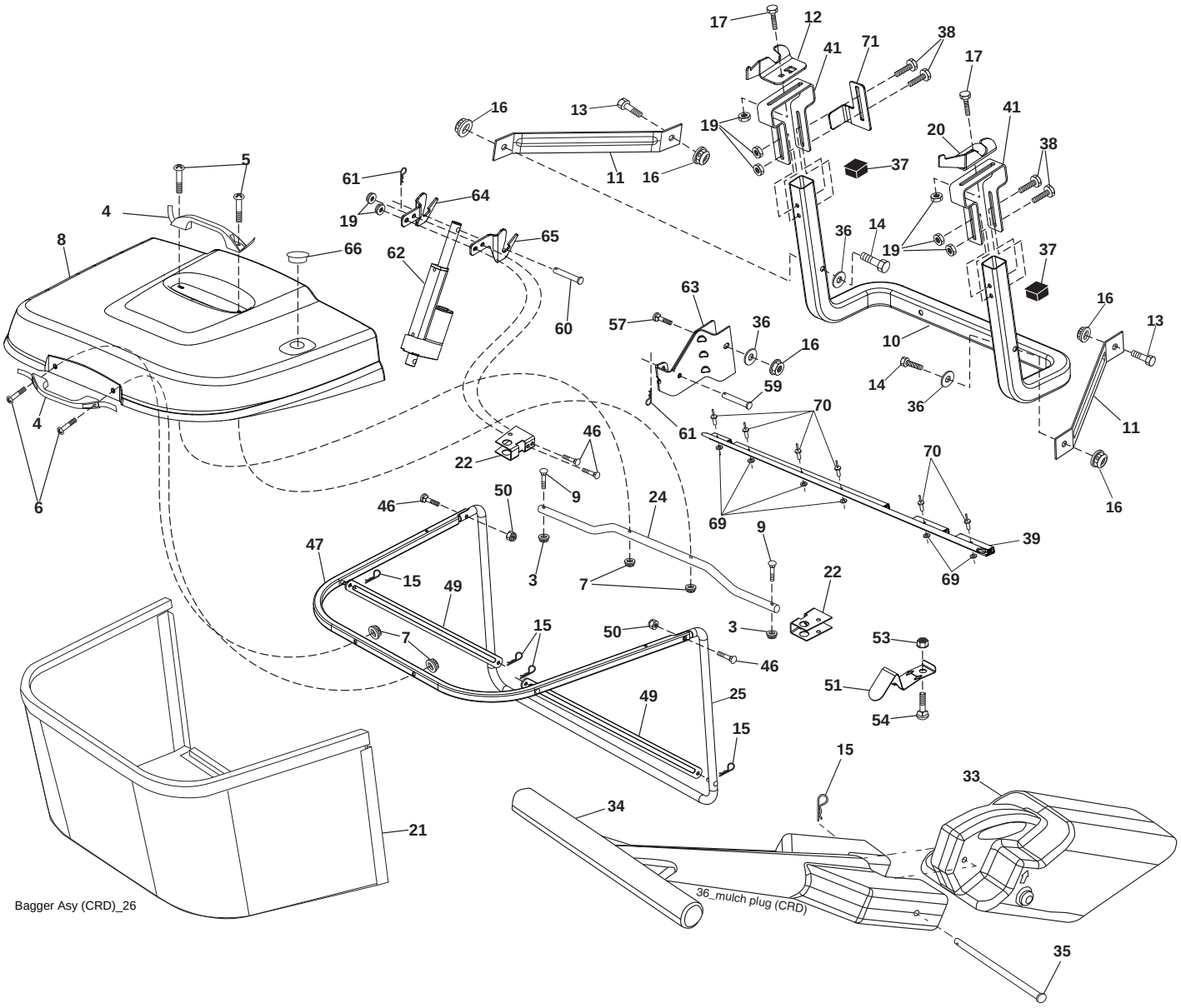

TRACTOR - - MODEL NO. LT2218CMA2 (96061026600), PRODUCT NO. 960 61 02-66 BAGGER 46

KEY NO.	PART NO.	DESCRIPTION
3	532 12 39-76	Nut Lock 1/4 Lge Flg Gr. 5 Zinc
4	532 16 99-16	Handle Bagger w/Lvrs Blk CRD
5	874 98 10-24	Screw Pan Head #10-24 x 1.50 Blk
6	874 98 10-32	Screw Pan Hd
7	873 40 10-00	Nut Wiz Lock Hex Serr/Hd 10-24
8	532 18 10-95	Cover Bagger
9	872 14 04-18	Bolt Carriage 1/4-20 x 2.25d x Gr. 5
10	532 18 12-82	Tube Support Bagger CRD
11	532 16 57-19	Bracket Support Upper Bag
12	532 18 88-48	Bracket Pivot LH
13	874 76 06-12	Bolt Fin Hex 3/8-16 unc x 3/4
14	874 52 06-36	Bolt Fin Hex 3/8-16 x 2-1/4 Gr. 5
15	532 12 46-70	Retainer Spring
16	873 90 06-00	Nut Lock 3/8-16 unc
17	872 14 05-06	Bolt Rdhd Sht Sqnk 5/16 -18 unc x 3/4
19	873 90 05-00	Nut Lock Hex Flange 5/16-18
20	532 18 88-47	Bracket Pivot RH
21	532 40 61-80	Bag Asm CRD
22	532 42 82-36	Bracket Side Bagger
24	532 16 57-83	Tube Pivot Bagger CRD
25	532 19 37-05	Tube Front Bagger
33	532 42 86-83	Plug Mulcher
34	532 16 55-70	Handle Mulcher
35	532 16 55-72	Pin Mulcher
36	819 13 20-12	Washer 13/32 x 1-1/4 x 12 Ga.
37	532 17 54-01	Plug Support Bagger CRD
38	872 01 05-20	Bolt 5/16-18 x 2-1/2
39	532 41 62-57	Seal
41	532 16 96-83	Bracket Pnt Adj Pvt Bagger CRD
46	872 11 05-10	Bolt 5/16-18 x 1-1/4
47	532 19 37-04	Tube Upper Bagger
49	532 19 33-05	Bar Spreader
50	873 80 05-00	Nut 5/16-18
51	532 19 99-03	Latch Spring Bagger
53	873 51 04-00	Nut 1/4-20 unc
54	872 14 04-06	Bolt 1/4-20 x 3/4 Gr. 5
57	872 14 06-22	Bolt Rdhd Sqnk
59	532 43 04-22	Pin Clevis 0.375 x 2.375
60	532 00 49-29	Rivet Pan Hd Drilled 1/4
61	532 12 47-88	Retainer Spring 1"
62	532 42 82-39	Actuator Elec
63	532 42 82-38	Bracket Asm. Lower
64	532 42 96-64	Bracket Mtg. Upper Left
65	532 42 96-65	Bracket Mtg. Upper Right
66	532 43 04-24	Plug Bagger
69	532 43 56-11	Washer .125
70	532 43 56-03	Rivet Pop .125 x .750
71	532 43 83-13	Actuator Support Brkt.

NOTE: All component dimensions given in U.S. inches
1 inch = 25.4 mm