ILLUSTRATED PARTS LIST

MODEL NO. 96051007300
CUSTOMER CATALOG NO. LT2320CMA2
PRODUCT NO. 960 51 00 73

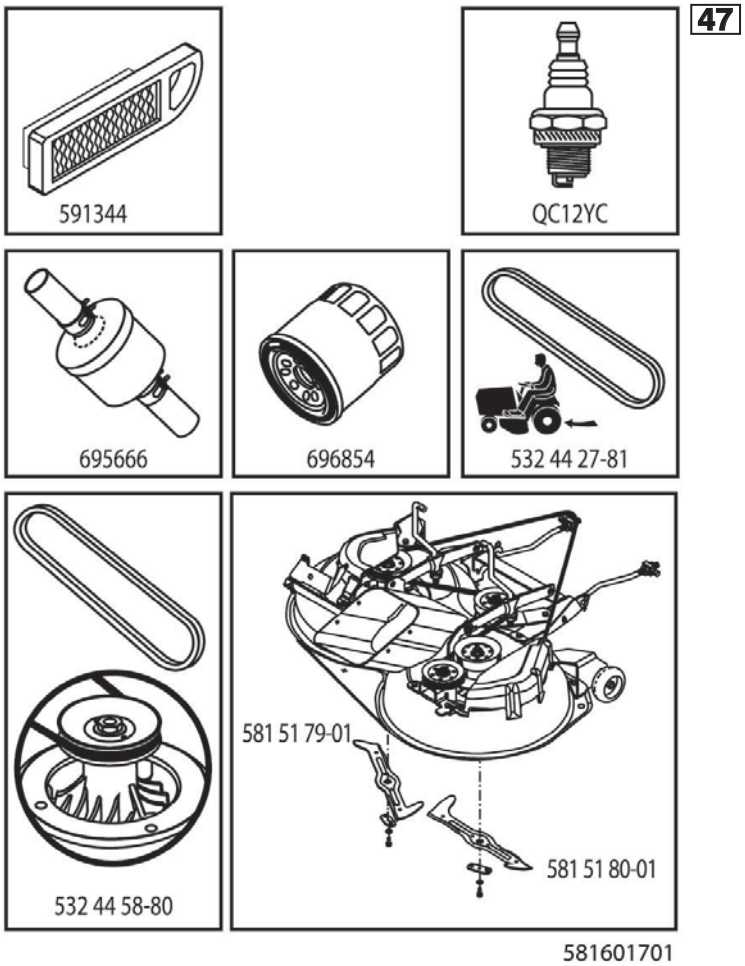

TRACTOR - - MODEL NO. LT2320CMA2 (96051007300), PRODUCT NO. 960 51 00 73
DECALS 27

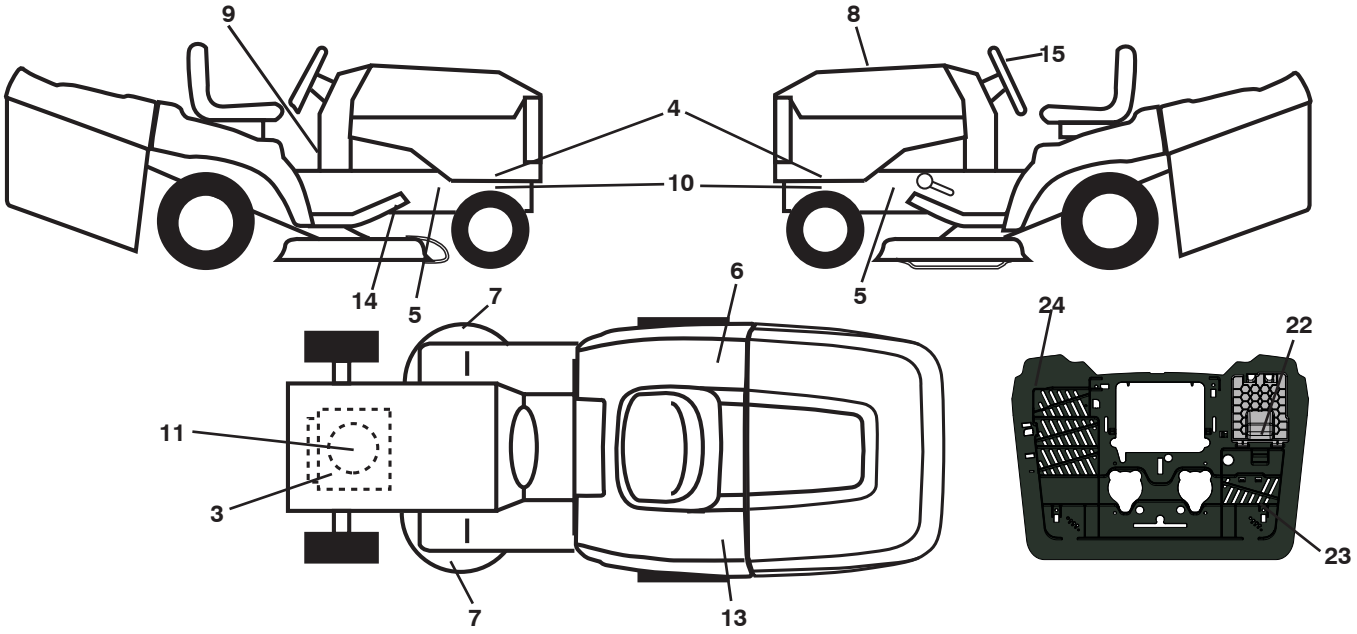

KEY NO.	PART NO.	DESCRIPTION
3	581 57 97-01	Decal, Engine Warning
4	581 77 75-01	Decal, Hood Panel
5	581 57 96-01	Decal, Chassis Hot Muffler
6	581 72 41-01	Decal, Fender 100 DB/CE
7	581 57 91-01	Decal, Cutfinger CE
8	581 60 17-01	Decal, Rpl.
9	532 44 02-47	Decal, Instruction MLCH/BG
10	581 57 98-01	Decal, Warning Service/Fire
11	581 59 40-01	Decal, Engine B&S

KEY NO.	PART NO.	DESCRIPTION
13	581 57 83-01	Decal, Warning
14	532 44 11-89	Decal, Deck Belt Sch.
15	532 43 74-45	Decal, Steering
22	532 44 51-02	Decal, Battery
23	532 44 46-19	Decal, Bypass
24	532 44 54-93	Decal, Info Warning
- -	532 42 59-76	Pad, Footrest, LH
- -	532 42 59-86	Pad, Footrest, RH
- -	581 79 37-40	Manual Oper. Euro

WHEELS AND TIRES

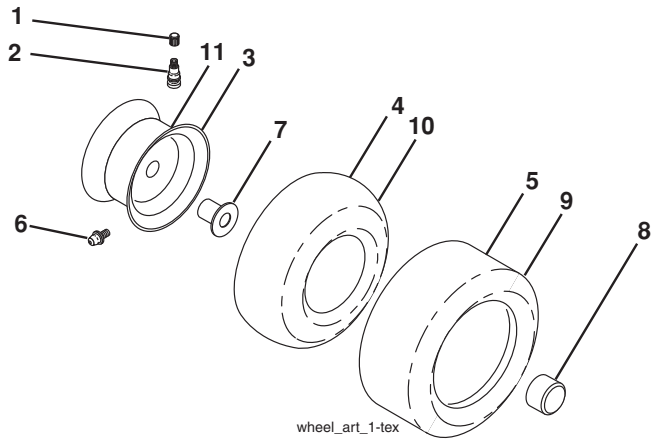

KEY NO.	PART NO.	DESCRIPTION
1	532 05 91-92	Cap Valve Tire
2	532 06 51-39	Stem Valve
3	532 13 83-36	Rim Asm. 6" Front
4	532 05 99-04	Tube Front (Service Item Only)
5	532 10 62-22	Tire F T 15 x 6 0 - 6
6	532 12 49-57	Fitting Grease (Front Wheel Only)
7	532 12 49-59	Bearing Flange (Front Wheel Only)
8	532 17 50-39	Cap Axle Blk. 1 50 x 1 00
9	532 42 05-31	Tire R 18 x 9.5-8 Turf Saver LT
10	532 12 49-26	Tube Rear (Service Item Only)
11	532 13 83-37	Rim Asm. 8" Rear
- -	532 14 43-34	Sealant, Tire (10 oz. Tube)

NOTE: All component dimensions given in U.S. inches
1 inch = 25.4 mm

TRACTOR - - MODEL NO. LT2320CMA2 (96051007300), PRODUCT NO. 960 51 00 73
SCHEMATIC 38

SCH26

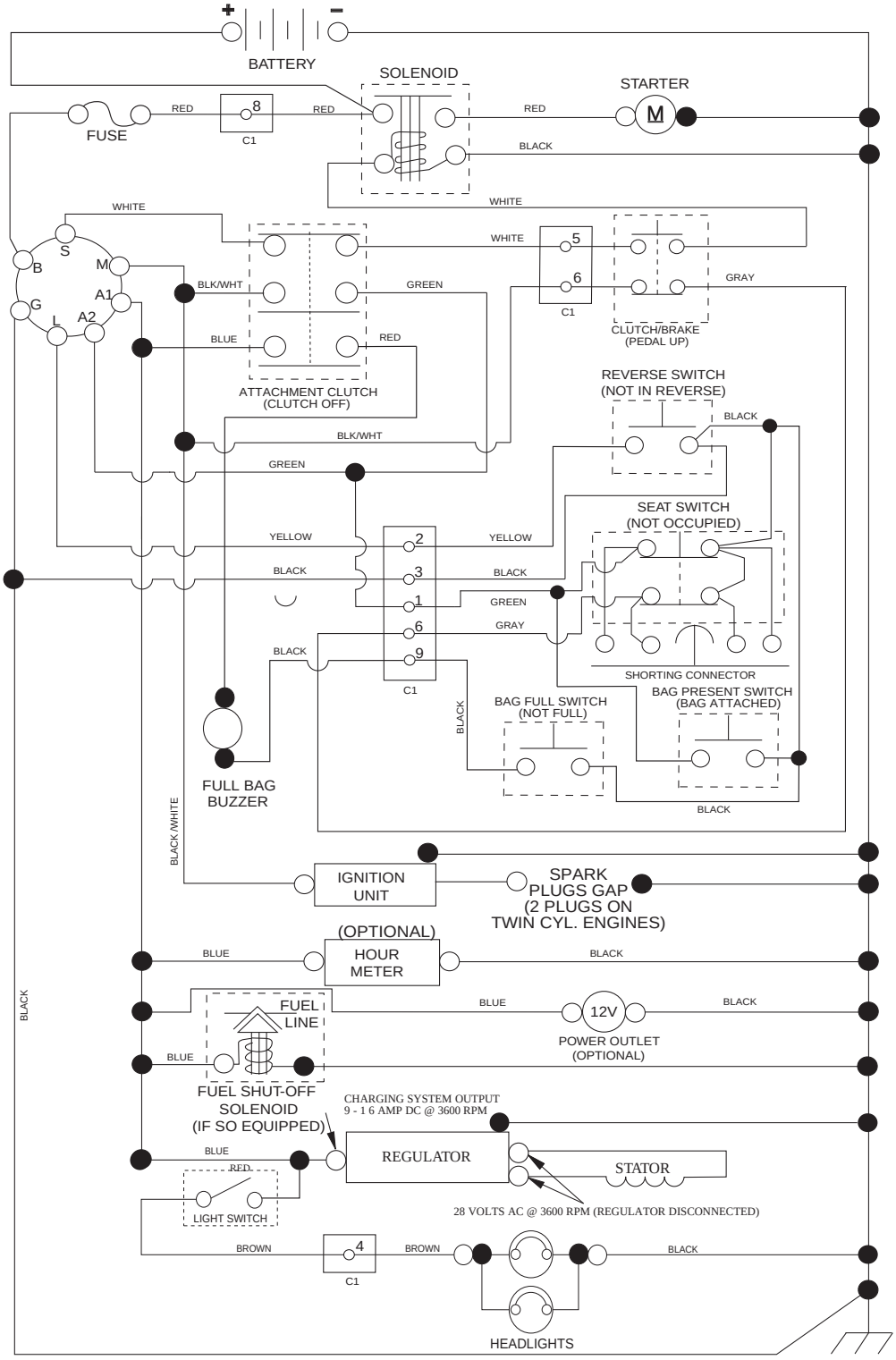

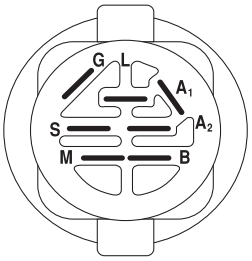

IGNITION SWITCH

POSITION	CIRCUIT "MAKE"
OFF	M+G+A1
RUN/OVERRIDE	B+A1
RUN	B+A1 L+A2
START	B + S + A1

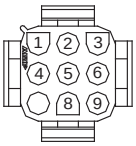

CHASSIS HARNESS
CONNECTOR (C1)
(MATING SIDE)

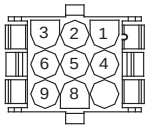

DASH HARNESS
CONNECTOR (C1)
(MATING SIDE)

WIRING INSULATED CLIPS
NOTE: IF WIRING INSULATED CLIPS WERE REMOVED FOR SERVICING OF UNIT, THEY SHOULD BE RE-INSTALLED TO PROPERLY SECURE YOUR WIRING.

NON-REMOVABLE CONNECTIONS

REMOVABLE CONNECTIONS

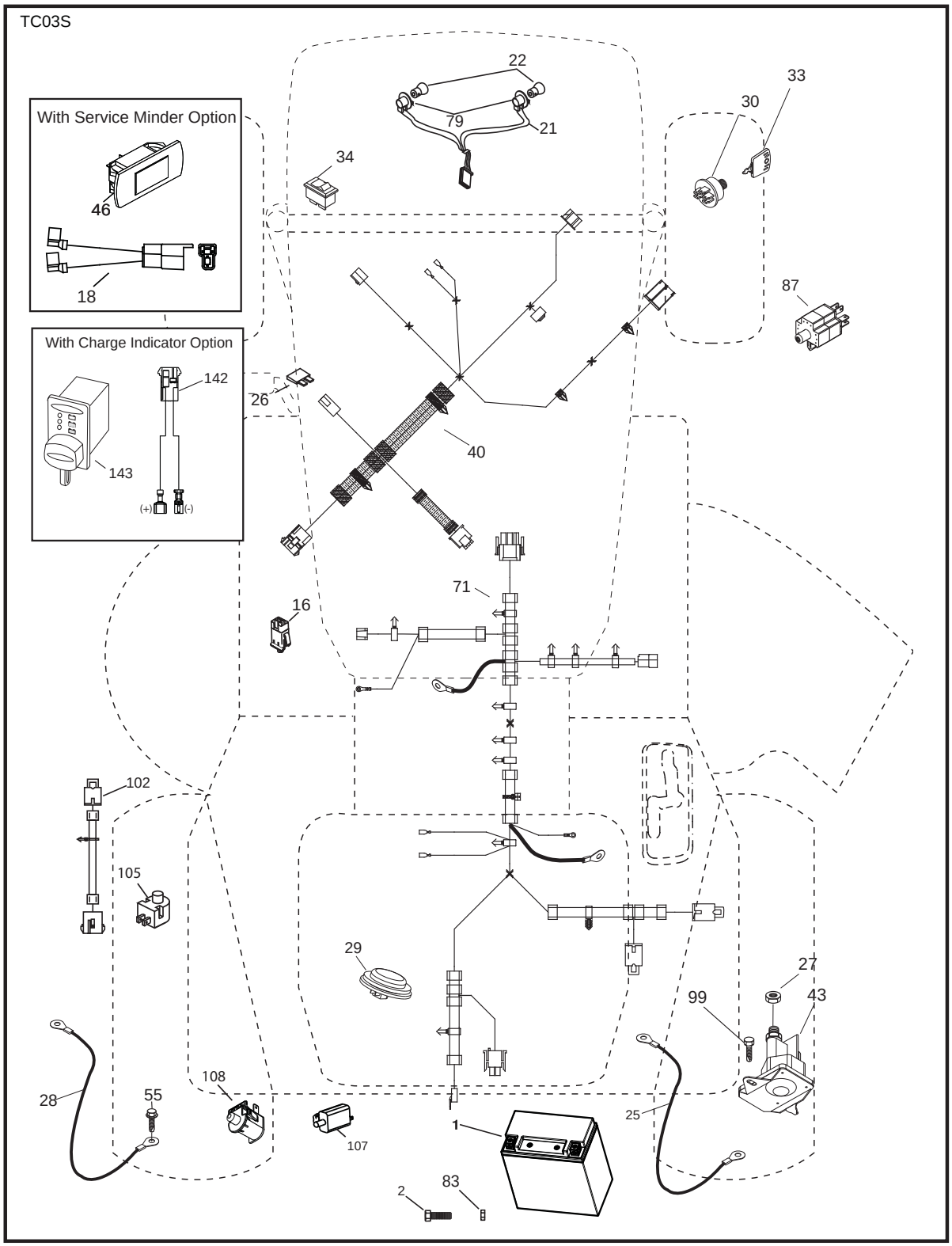
TC03S
With Service Minder Option
46
18
With Charge Indicator Option
142
143
(+)
(-)
22
79
21
33
30
34
87
26
40
71
16
102
105
29
27
99
43
28
55
108
107
1
25
2
83

KEY NO.	PART NO.	DESCRIPTION
1	532 43 71-57	Battery
2	532 44 09-23	Screw Hex Hd Cap M6 x 1.12MM
16	532 17 61-38	Switch Interlock Push-In
21	532 40 02-52	Harness Light w/4152J
22	532 00 41-52	Bulb Light
25	532 44 13-82	Cable Starter
26	532 17 51-58	Fuse
27	873 51 04-00	Nut Keps Hex 1/4-20 unc
28	532 44 13-83	Cable, Ground
29	532 40 15-45	Switch, Seat
30	532 19 33-50	Switch, Ign
33	532 41 19-35	Key/Chain
34	532 11 07-12	Switch Light/Reset
40	532 42 10-02	Harness Ign. Dash
41	817 72 04-08	Screw 1/4-20 x 1/2
43	532 19 25-07	Solenoid
46	532 40 17-63	Gauge Serviceminder Hrmtr
55	817 06 05-12	Screw Thdrol 5/16-18 x 3/4 TYTT
71	532 44 08-20	Harness Ignition Chassis
79	532 17 52-42	Socket Asm. Bulb
83	532 43 67-74	Nut Square M6 x 1.8.5 x 11MM
87	532 42 10-60	Switch Railmount
102	532 44 12-62	Harness Jumper
105	532 40 75-68	Switch Reverse
107	532 18 03-79	Switch Full Bagger
108	532 42 10-62	Switch Snapmount

NOTE: All component dimensions given in U.S. inches
1 inch = 25.4 mm

TRACTOR - - MODEL NO. LT2320CMA2 (96051007300), PRODUCT NO. 960 51 00 73
CHASSIS AND ENCLOSURES 39

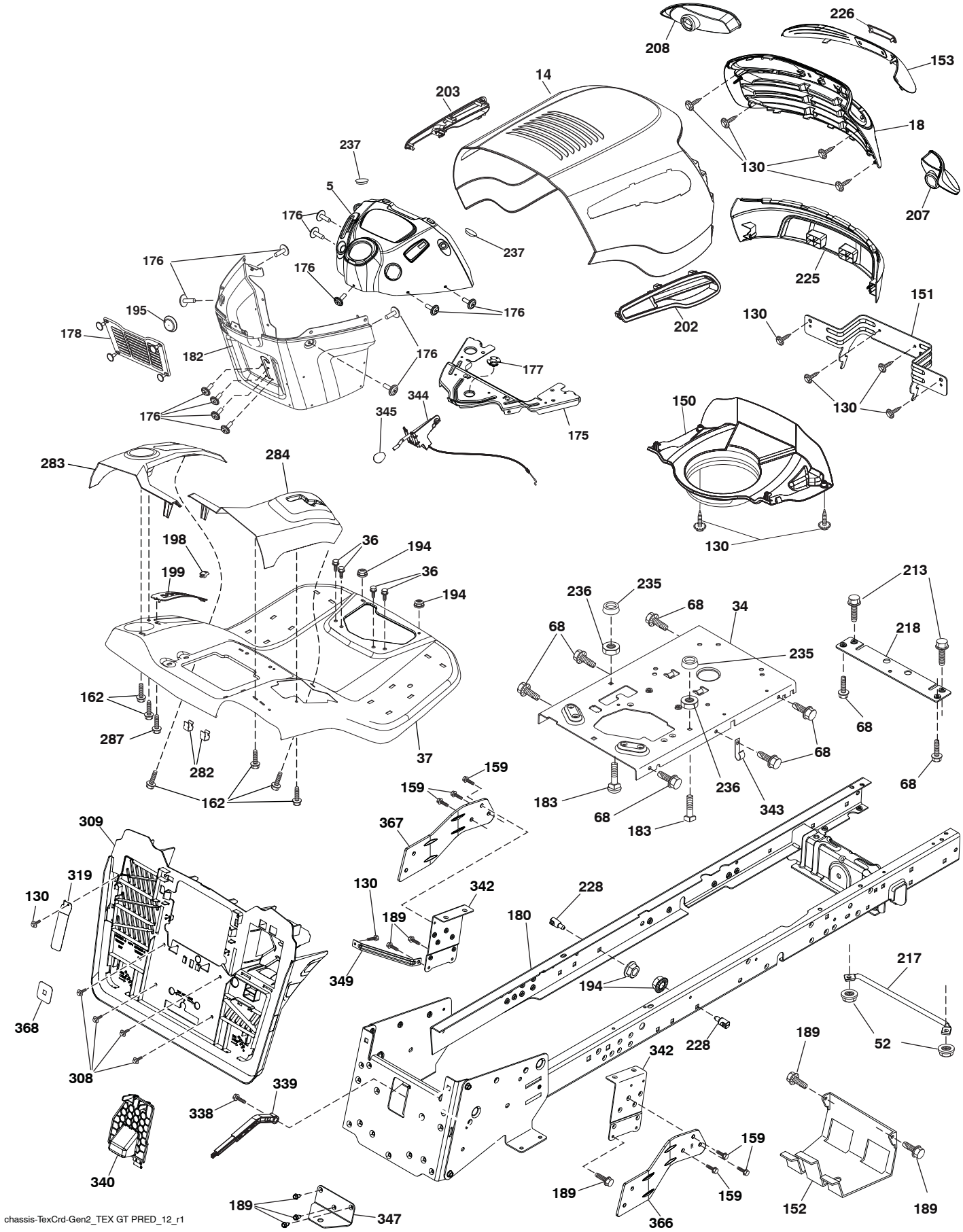

chassis-TexCrd-Gen2_TEX GT PRED_12_r1

TRACTOR - - MODEL NO. LT2320CMA2 (96051007300), PRODUCT NO. 960 51 00 73
CHASSIS AND ENCLOSURES 39

KEY NO.	PART NO.	DESCRIPTION
5	532 44 18-82	Dash
14	532 44 38-24	Hood
18	532 42 73-33	Grille
34	580 91 09-01	Plate Engine
36	817 06 05-12	Screw 5/16-18 x 3/4
37	532 44 22-31	Fender
52	873 68 05-00	Nut Crownlock 5/16-18
68	817 49 05-08	Screw Thdrol. 5/16-18 x 1/2
130	532 41 63-58	Screw #10 x .750 BOS Thread
150	584 86 29-01	Air Duct
151	532 44 54-94	Bracket Pivot
152	532 19 95-35	Shield Browning
153	532 42 47-17	Lens Bar
159	817 00 06-12	Screw 3/8-16 x 3/4
162	532 14 24-32	Screw Hex Wsh. Hi-Lo 1/4 x 1/2 unc
175	532 19 63-04	Crossmember
176	532 40 07-76	Screw 10-24 x 5/8
177	532 19 52-27	Bushing Steering
178	532 19 97-82	Cargo Asm. Net
180	583 90 27-01	Chassis
182	532 43 89-67	Dash Lower
183	874 52 05-20	Bolt 5/16-18 x 1-1/4
189	817 00 05-12	Screw 5/16-18 x 3/4
194	873 90 05-00	Nut Lock Hex Flange 5/16-18
195	532 40 41-37	Plug Hole Dash Lower
198	532 44 15-52	Indicator Deck Lift
199	532 41 87-39	Plate Deck Lift
202	532 44 54-26	Side Vent RH
203	532 44 55-83	Side Vent LH
207	532 19 89-63	Bezel Grille RH
208	532 19 89-64	Bezel Grille LH
213	874 76 05-12	Bolt Hex HD 5/16-18 unc 3/4
217	532 40 91-67	Rod Pivot Hood
218	532 19 63-95	X-Piece Hood Stop
225	532 44 38-25	Bumper Grille
226	532 42 47-16	Logo
228	532 19 51-61	Stud Fastener
235	532 40 61-29	Spacer Fender
236	873 93 05 00	Nut Center Lock 5/16-18 unc
237	532 40 37-04	Plug Mount Cargo
282	532 41 41-10	Clip Retainer
283	532 44 76-71	Console Deck Lift
284	532 44 72-11	Console Shift RH
287	817 60 04-06	Screw Hex Washead. 1/4-20 x 3/8
308	532 17 18-77	Bolt 5/16-18 unc x 3/4
309	581 32 89-07	Backplate
319	581 31 39-06	Lever Bagger Presence
338	532 43 66-40	Bolt Shoulder
339	532 43 66-41	Lever Bagger Full
340	581 32 90-01	Door Battery Tray
342	532 43 59-38	Support Fender
343	532 44 07-49	Clip
344	532 43 89-70	Control EZ Mulch
345	532 44 06-39	Knob Oval
347	532 44 58-32	Subasm. Hitch Tow
349	532 43 66-06	Bracket Support
366	581 31 46-02	Bracket RH Front
367	581 31 45-02	Bracket LH Front
368	581 42 48-01	Full Lever Bagger
- -	532 40 09-44	Kit Bumper

NOTE: All component dimensions given in U.S. inches
1 inch = 25.4 mm

TRACTOR - - MODEL NO. LT2320CMA2 (96051007300), PRODUCT NO. 960 51 00 73
DRIVE 40

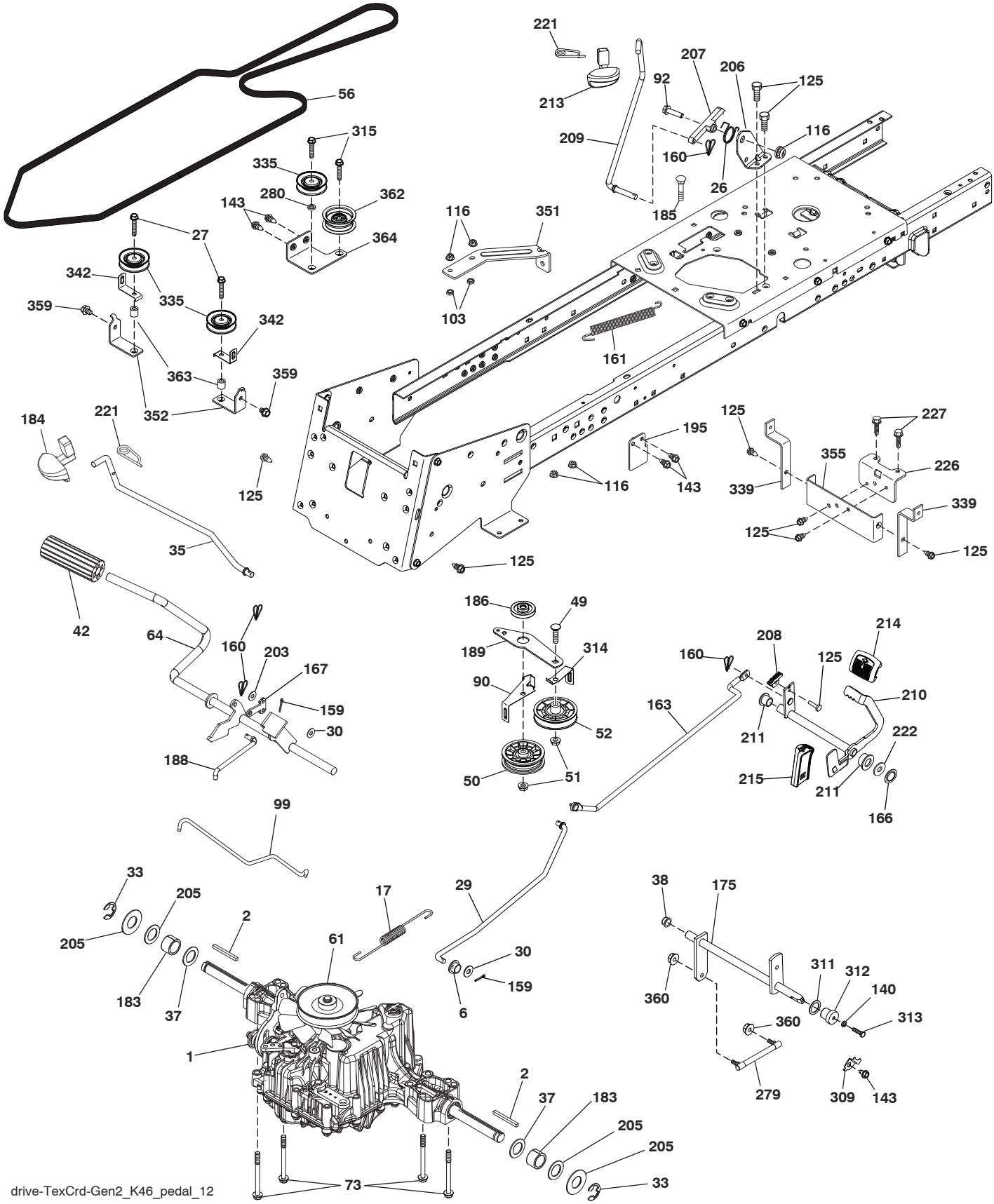

TRACTOR - - MODEL NO. LT2320CMA2 (96051007300), PRODUCT NO. 960 51 00 73
DRIVE 40

KEY NO.	PART NO.	DESCRIPTION
1	– – – – – –	Transaxle, Tufftorq K46DF (446488) (Order parts from transaxle manufacturer.)
2	532 12 35-83	Key Square
6	532 12 40-28	Bushing
17	532 43 62-27	Spring, Brake
26	532 19 96-79	Spring Return
27	817 49 05-28	Screw Hexwsh Thd. 5/16-18 x 1-3/4
29	532 44 27-95	Rod, Brake
30	819 13 16-16	Washer 13/32 x 1 x 16 Ga.
33	812 00 00-01	Ring E
35	583 86 45-01	Rod, Brake, Park
37	532 18 89-67	Washer Hard. .793 x 1.637 x 0.60
38	532 16 96-13	Nyliner Snap In
42	532 12 48-72	Cover, Foot Pedal
49	872 11 06-14	Bolt Rdhd 3/8-16 unc x 1-3/4 Gr. 5
50	532 19 43-27	Idler Flat
51	873 90 06-00	Lock Nut 3/8-16
52	532 19 43-26	Idler V-Groove
56	532 44 27-81	V-Belt, Drive
61	532 44 51-51	Pulley Transaxle
64	532 19 78-65	Shaft Asm.
73	874 49 05-44	Bolt Hex Flghd 5/16-18 Gr. 5
90	532 44 36-05	Keeper Belt Clutching
92	874 76 05-20	Bolt Fin. Hex 5/16-18 unc x 1.25
99	532 44 39-47	Rod Bypass
103	873 35 05-00	Nut
116	873 90 05-00	Nut Lock Hex Flange 5/16-18
125	817 00 05-12	Screw 5/16-18 x 3/4
140	810 04 04-00	Washer Lock Hvy. Helical 1/4
143	817 49 05-08	Screw Thdrol 5/16-18 x 1/2 TYTT
159	876 02 04-12	Pin Cotter 1/8 x 3/4
160	532 16 94-84	Retainer Clip
161	532 10 57-09	Spring, Return, Clutch
163	532 44 27-93	Rod Control
166	532 42 91-64	Nut Push .625
167	532 40 52-57	Latch Brake Parking
175	532 42 93-59	Shaft Shift Tapered
183	532 13 70-57	Spacer Axle
184	532 44 14-55	Handle Parking Break
185	872 11 06-22	Bolt Rdhd 3/8-16 unc x 2-3/4 Gr. 5
186	532 19 43-21	Spacer Retainer
188	532 19 43-23	Link Clutch Ground Drive
189	532 43 36-11	Bellcrank Grounddrive
195	580 45 69-01	Bracket Brake Rod
203	819 11 11-16	Washer 11/32 x 11/16 x 16 Ga.
205	532 12 17-48	Washer 25/32 x 1-5/8 16 Ga.
206	532 44 85-96	Bracket Mount Latch
207	532 19 78-68	Latch Control
208	532 19-78-69	Gear Sector Control Cruise
209	532 19 95-92	Rod Control Cruise
210	532 40 09-80	Rocket Asm Pedal
211	532 12 01-83	Bearing Nylon
213	532 40 31-19	Knob Control Cruise
214	532 42 12-63	Pedal Forward Pad
215	532 41 94-82	Pedal Reverse Pad
221	532 40 31-87	Retainer Spring Clip
222	879 21 20-10	Washer 21/32 x 1-1/4
226	532 40 15-64	Bracket Mount
227	817 49 05-12	Screw
279	532 44 42-83	Link Asm.
280	819 11 10-12	Washer 11/32 x 5/8 x 12 Ga.
309	532 16 55-81	Plaste Fstnr
311	532 16 98-45	Washer Nylon
312	532 16 56-14	Hub Tapered Round
313	874 78 04-16	Bolt Hex Fin 1/4-20 x 1 Gr. 5
314	532 44 47-13	Belt Keeper
315	817 58 05-20	Screw Thdrol 5/16-18 x 4.25
335	532 19 95-34	Pulley V-Idler
339	532 43 68-67	Strap Torque K46 CRD Tex
342	532 18 26-82	Keeper Belt 2.5
351	532 43 69-98	Bracket 97
352	532 43 56-45	Bracket Idler CRD Tex
355	532 43 56-69	Strap Torque K46
359	817 49 06-10	Screw Hxwh. Thdr. 3/8-16 x 5/8
360	532 44 47-14	Nut Hex Centerlock 5/16-24 unf
362	532 43 68-12	Idler Flat 2.25"
363	532 44 27-80	Spacer 343 x 63 x .62
364	532 44 30-32	Bracket Idler

NOTE: All component dimensions given in U.S. inches
1 inch = 25.4 mm

TRACTOR - - MODEL NO. LT2320CMA2 (96051007300), PRODUCT NO. 960 51 00 73
ENGINE 24

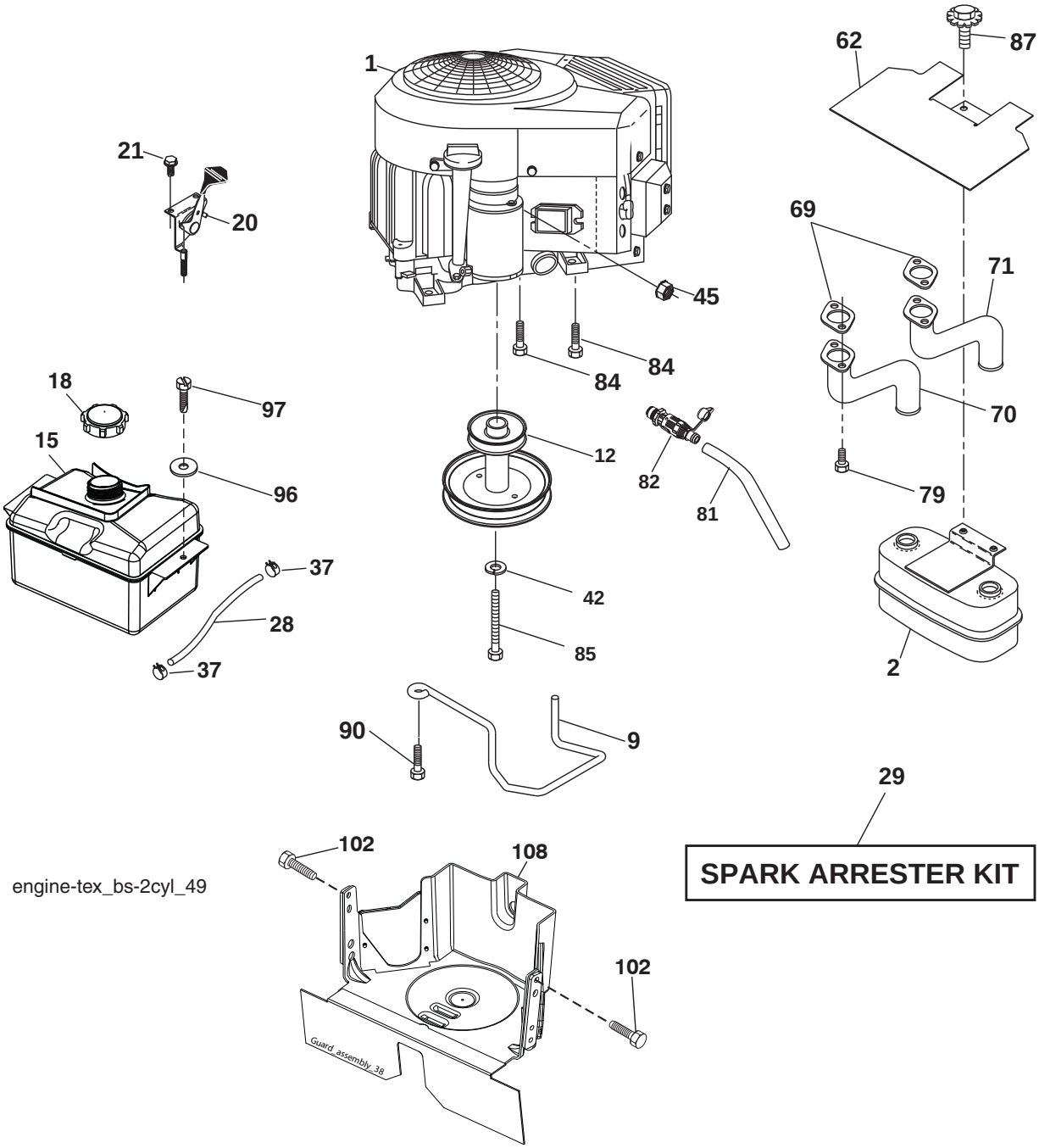

KEY NO.	PART NO.	DESCRIPTION
1	– – – – – –	Engine B&S Model No. 406777-0177-B1 (581583801)(Order parts from engine manufacturer.)
2	532 14 97-23	Muffler
9	532 19 43-20	Keeper Belt Engine
12	532 40 54-71	Pulley Engine
15	532 43 08-25	Tank Fuel 2.0
18	532 43 02-20	Cap Fuel
20	532 42 35-02	Control Throttle/Choke
21	532 41 63-58	Screw #10 x 0.750 BOS Thread
28	532 13 70-40	Fuel Line
29	532 13 71-80	Spark Arrester Kit
37	532 12 34-87	Clamp Hose
42	810 04 07-00	Lock Washer Hvy. 7/16
45	873 51 04-00	Nut Keps Hex 1/4-20 unc
62	532 43 40-17	Shield Heat Muffler
69	532 16 53-91	Gasket
70	581 88 11-01	Exhaust Tube LH
71	581 88 10-01	Exhaust Tube RH
79	532 18 39-06	Screw Socket HD 5/16-18 x 1
81	532 14 84-56	Tube Drain Oil Easy
82	532 42 82-87	Valve Oil Drain
84	817 06 06-20	Screw 3/8-16 x 1-1/4
85	532 17 39-37	Bolt Hex 7/16-20 x 4 x Gr. 5-1.5 Thr
87	532 17 18-77	Bolt 5/16-18 x 3/4
90	817 00 06-16	Screw 3/8-16 x 1
96	819 09 14-16	Washer 9/32 x 7/8 x 16 Ga.
97	817 67 04-12	Screw 1/4-20 x 3/4
102	817 06 05-16	Screw 5/16-18 x 1
108	532 42 30-41	Cover Pulley Engine

NOTE: All component dimensions given in U.S. inches
1 inch = 25.4 mm

Engine Power Rating Information

The gross power rating for individual gas engine models is labeled in accordance with SAE (Society of Automotive Engineers) code J1940 (Small Engine Power & Torque Rating Procedure), and rating performance has been obtained and corrected in accordance with SAE J1995 (Revision 2002-05). Torque values are derived at 3060 RPM; horsepower values are derived at 3600 RPM. Actual gross engine power will be lower and is affected by, among other things, ambient operating conditions and engine-to-engine variability. Given both the wide array of products on which engines are placed and the variety of environmental issues applicable to operating the equipment, the gas engine will not develop the rated gross power when used in a given piece of power equipment (actual “on-site” or net power). This difference is due to a variety of factors including, but not limited to, accessories (air cleaner, exhaust, charging, cooling, carburetor, fuel pump, etc.), application limitations, ambient operating conditions (temperature, humidity, altitude), and engine-to-engine variability. Due to manufacturing and capacity limitations, Briggs & Stratton may substitute an engine of higher rated power for this Series engine.

TRACTOR - - MODEL NO. LT2320CMA2 (96051007300), PRODUCT NO. 960 51 00 73
STEERING ASSEMBLY 41

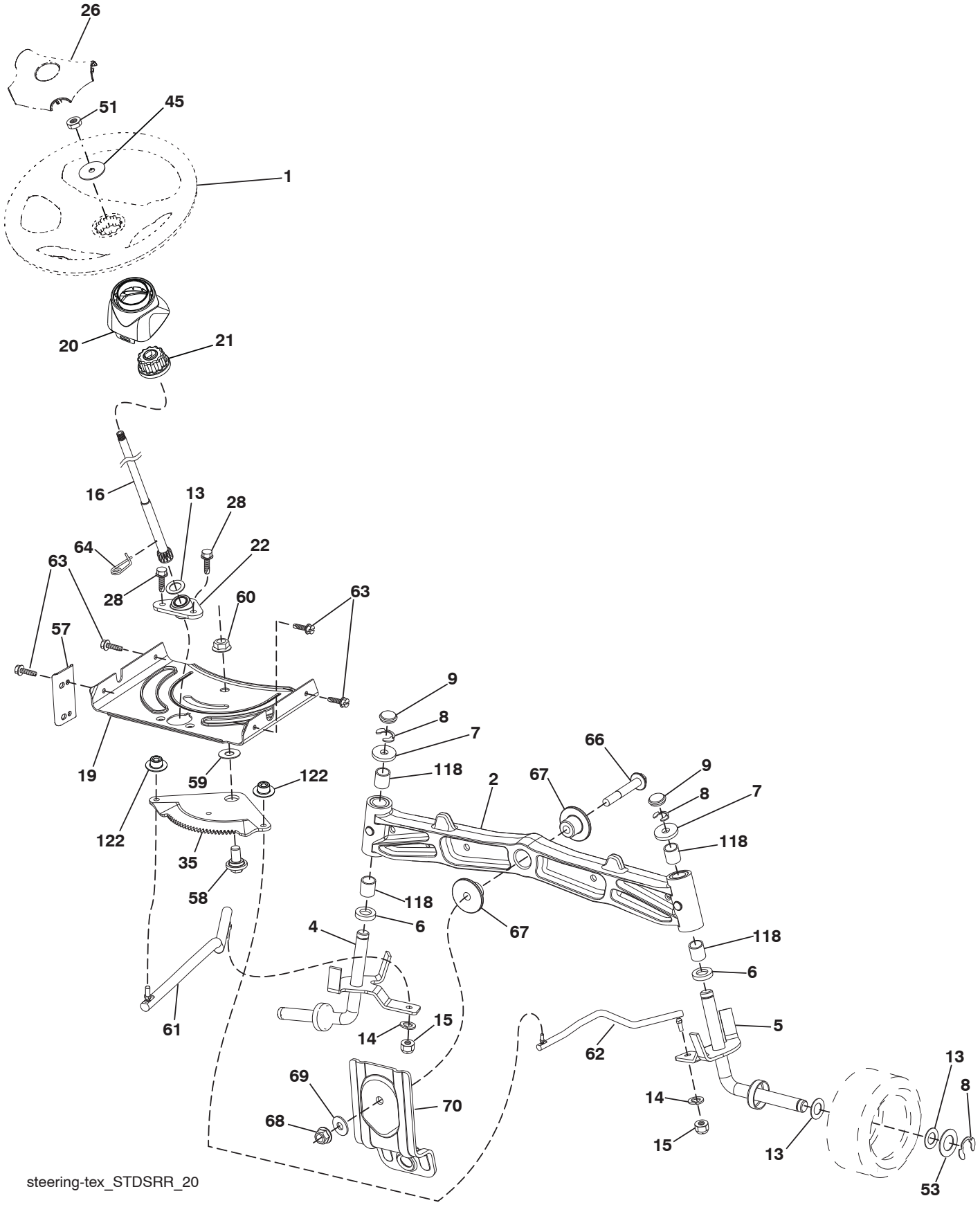

STEERING ASSEMBLY 41

KEY NO.	PART NO.	DESCRIPTION
1	532 42 41-46	Wheel, Steering
2	532 41 35-91	Axle Asm., Front
4	532 40 30-87	Spindle Asm., LH
5	532 40 30-88	Spindle Asm., RH
6	532 12 49-31	Bearing, Race Thrust Harden
7	532 12 17-48	Washer 25/32 x 1-5/8 x 16 Ga.
8	812 00 00-29	Ring, Klip #T5304-75
9	532 12 12-32	Cap, Spindle
13	532 12 17-49	Washer 25/32 x 1-1/4 x 16 Ga.
14	810 04 06-00	Washer, Lock Hvy Hlcl Spr 3/8
15	873 54 06-00	Nut, Crown Lock 3/8-24 unf
16	532 19 47-46	Shaft Steering
19	532 19 47-29	Plate Steering
21	532 18 67-37	Adapter, Wheel Steering
20	532 42 47-40	Steering Boot
22	532 42 05-37	Strg. Supt. Lower
26	532 42 41-47	Insert, Wheel Steering
28	817 00 06-12	Screw 3/8-16 x 3/4
35	532 19 47-32	Gear, Sector
45	819 18 38-12	Washer 9/16 ID x 2-3/8 OD 12 Ga.
51	873 94 08-00	Nut Hex Jam Toplock 1/2-20 unf
53	532 18 89-67	WasherHardened.793x1.637x.060
57	532 40 74-65	Bracket Upstop
58	532 19 47-47	Bolt Shoulder Sector Pivot CFM
59	532 19 47-48	Washer Thrust Sector Steering
60	873 97 10-00	Nut Flange Lock 5/8-11
61	532 19 47-40	Draglink LH
62	532 19 47-41	Draglink, RH
63	817 00 05-12	Screw 5/16-18 x 3/4
64	532 19 98-49	Retainer Clip Spring Steering
66	871 02 07-48	Bolt Hex Fghd 7/16-14 x 3 Serr
67	532 19 47-37	Bushing PM Front Axle
68	873 90 07-00	Nut Lock Flange 7/16-14 Gr. 5
69	532 19 91-62	Washer 1.5 x .505 x .118
70	532 19 61-97	Bracket Deck Susp. Front
118	532 40 60-13	Bushing Axle Cast
122	532 44 49-62	Cap Gear

NOTE: All component dimensions given in U.S. inches
1 inch = 25.4 mm

TRACTOR - - MODEL NO. LT2320CMA2 (96051007300), PRODUCT NO. 960 51 00 73
MOWER DECK 44

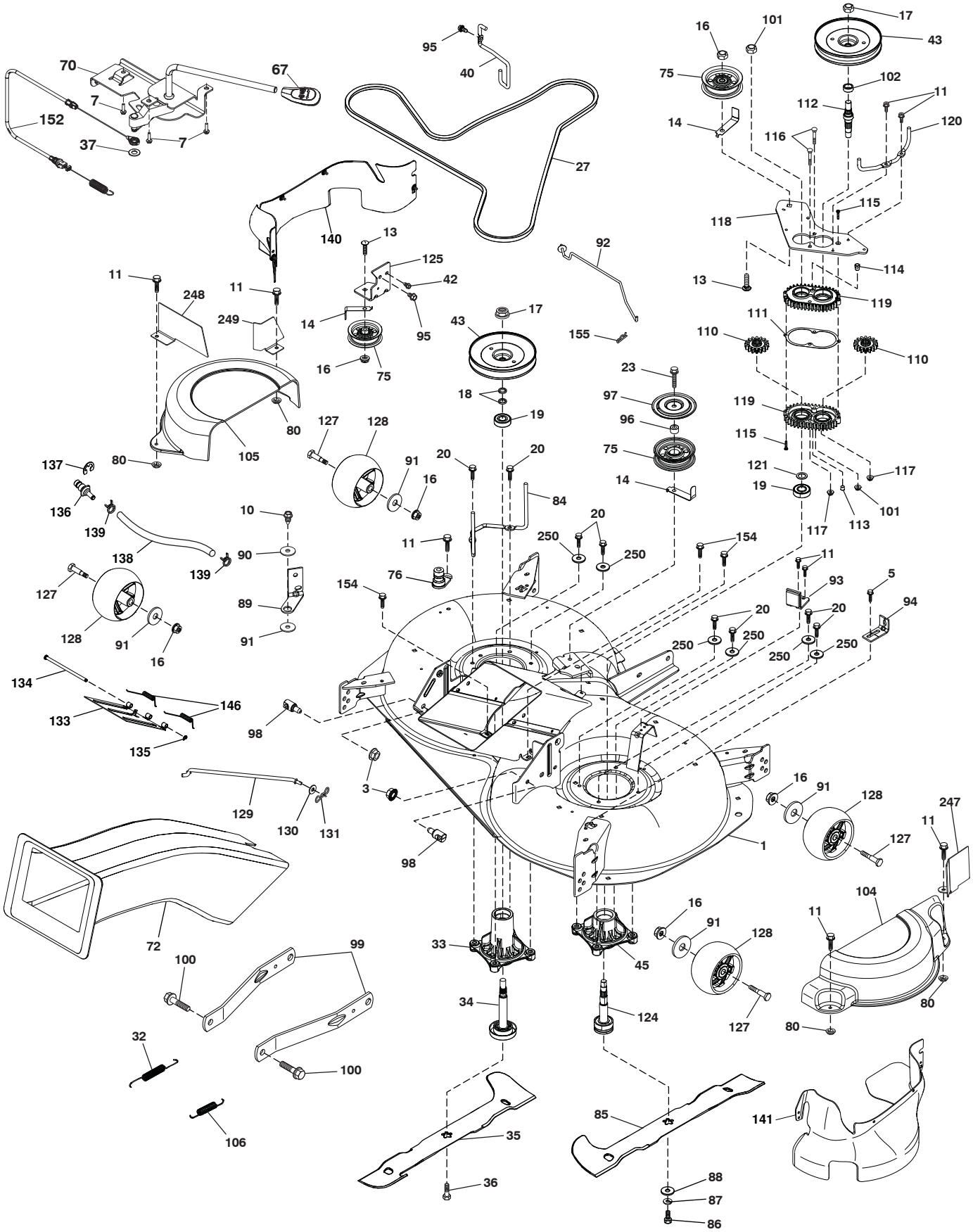

tex-deck_TexCRD-Gen2_53

TRACTOR - - MODEL NO. LT2320CMA2 (96051007300), PRODUCT NO. 960 51 00 73
MOWER DECK 44

KEY NO.	PART NO.	DESCRIPTION
1	532 44 77-36	Deck Weldment
3	873 90 05-00	Nut Lock Hex Flange 5/16-18
5	817 00 05-10	Bolt 5/16-18
7	532 41 63-58	Screw #10 x 0.750 BOS Thread
10	817 00 06-16	Screw 3/8-16 x 1 smgml tap
11	532 13 77-29	Screw Thd Roll 1/4-20 X 5/8
13	872 11 06-12	Bolt Carr Sh 3/8-16 X 1-1/2 Gr. 5
14	532 15 60-85	Keeper Belt Idler
16	873 90 06-00	Nut Lock FIG 3/8 - 16 unc
17	532 40 02-34	Nut Flange Lock Top
18	532 18 76-90	Washer Spacer Mandrel
19	532 11 04-85	Bearing Ball Mandrel
20	532 17 39-84	Screw Thread Roll
23	817 49 06-28	Screw Thdrol 3/8-16 X 1-3/4
27	532 44 58-80	V-Belt Drive
32	532 40 18-72	Spring Return Deck
33	580 79 61-01	Mandrel Asm.Tall
34	580 85 47-01	Shaft Asm Mndrel Tall
35	581 51 79-01	Blade Mower LH
36	532 19 30-03	Bolt/Washer Asm 7/16-20 unf
37	819 13 13-16	Washer 13/32 x 13/16 x 16 Ga.
40	532 19 72-58	Keeper Belt Engine LH
42	817 00 05-12	Screw 5/16-18 x 3/4
43	532 44 32-39	Pulley Mandrel
45	581 65 08-01	Mandrel Asm. Short
67	532 40 30-12	Handle Clutch Cable
70	532 19 99-72	Clutch Asm Manual
72	581 45 41-01	Chute Upper
75	532 13 14-94	Pulley Idler Flat
76	532 43 96-40	Washout Port
80	532 42 30-62	Palnut
84	532 44 32-35	Keeper Belt LH Mandrel
85	581 51 80-01	Blade Mower RH
86	532 18 17-13	Bolt 3/8-24 x 1.50 Gr. 8
87	810 03 06-00	Washer Lock Hvy 3/8
88	532 14 02-96	Washer Hard Blade Mower Vented
89	532 19 72-61	Arm Brake 97 LH
90	532 19 90-92	Spacer Retainer
91	819 13 20-12	Washer 13/32 x 1-1/4 x 12 Ga.
92	532 44 32-33	Rod Brake Assembly
93	532 43 81-25	Arm Brake RH
94	532 19 72-50	Bracket Clutch Cable
95	817 00 06-12	Screw
96	532 40 02-71	Spacer
97	532 18 20-61	Shield Idler Mower
98	532 19 51-61	Stud Fastener
99	532 19 51-86	Arm Suspension Mower Rear
100	532 19 65-39	Bolt Shoulder
101	873 68 09-00	Nut Crownlock 9/16 - 18 unc
102	532 40 25-11	Spacer Bearing Swing Plate
104	581 71 40-01	Mandrel Cover RH
105	532 44 47-55	Mandrel Cover LH
106	532 19 32-16	Spring Brake Return
110	532 41 53-56	Gear Output
111	532 43 69-79	Gasket Gearcase
112	532 44 38-52	Shaft Gearcase Adapter
113	532 43 85-33	Plug Oil
114	532 43 85-34	Valve Relief
115	818 03 10-16	Screw Torx #10-24 x 1
116	872 11 04-14	Bolt 1/4-20 x 1.75 Gr. 5
117	873 90 04-00	Nut Hex Flange 1/4-20 unc
118	532 44 32-32	Arm Clutching
119	532 43 81-66	Gearcase Subasm
120	532 44 32-36	Keeper Belt RH
121	532 43 69-85	Washer
124	581 65 07-01	Shaft Asm Mndrel Short
125	532 44 04-20	Bracket Idler Chassis
127	532 19 34-06	Bolt Shoulder 3/8-16 x 3-5/8 Gr. 5
128	532 17 48-73	Wheel Gauge
129	532 44 32-37	Rod Anti-Sway
130	819 13 13-12	Washer 13/32 x 13/16 x 12 Ga.
131	532 19 42-08	Pin Cotter 5/16 Bow Tie Lock
133	532 43 81-97	EZ Mulch Door
134	532 43 58-61	Pin Hinge
135	532 43 79-88	E-Ring 5/16
136	532 43 96-39	Washout Port Remote
137	812 00 00-29	Ring Klip
138	532 44 76-67	Washout Port Hose
139	532 44 07-42	Hose Clamp
140	580 36 99-01	Guard French LH
141	532 44 77-03	Guard French RH
146	532 44 58-96	Spring
152	532 44 76-66	Cable Clutch Manual w/Spring
154	532 19 98-55	Screw Thd Roll 1/4-20 x 1/2
155	532 12 47-88	Retainer Spring
247	581 26 34-02	Guard Steel
248	581 26 36-02	LH Rear French Steel Guard
249	581 26 35-02	LH Front French Steel Guard
250	819 11 12-12	Washer 11/32 x 3/4 x 12 Ga.
- -	580 85 60-01	Mandrel Assembly-Tall (Includes Hoing (key #33), Shaft Assembly (key #34), and Bearing (key #19) Only - Pulley/Nut/Washer And Blade Bolt/Washers Not Included)
- -	581 65 05-01	Mandrel Assembly-Short (Includes Housing (key #45), Shaft Assembly (key #124), and Bearing (key #19) Only - Pulley/Nut/Washer And Blade Bolt/Washers Not Included)
- -	581 97 57-01	Replacement Mower Complete

NOTE: All component dimensions given in U.S. inches
1 inch = 25.4 mm

TRACTOR - - MODEL NO. LT2320CMA2 (96051007300), PRODUCT NO. 960 51 00 73
MOWER LIFT 45

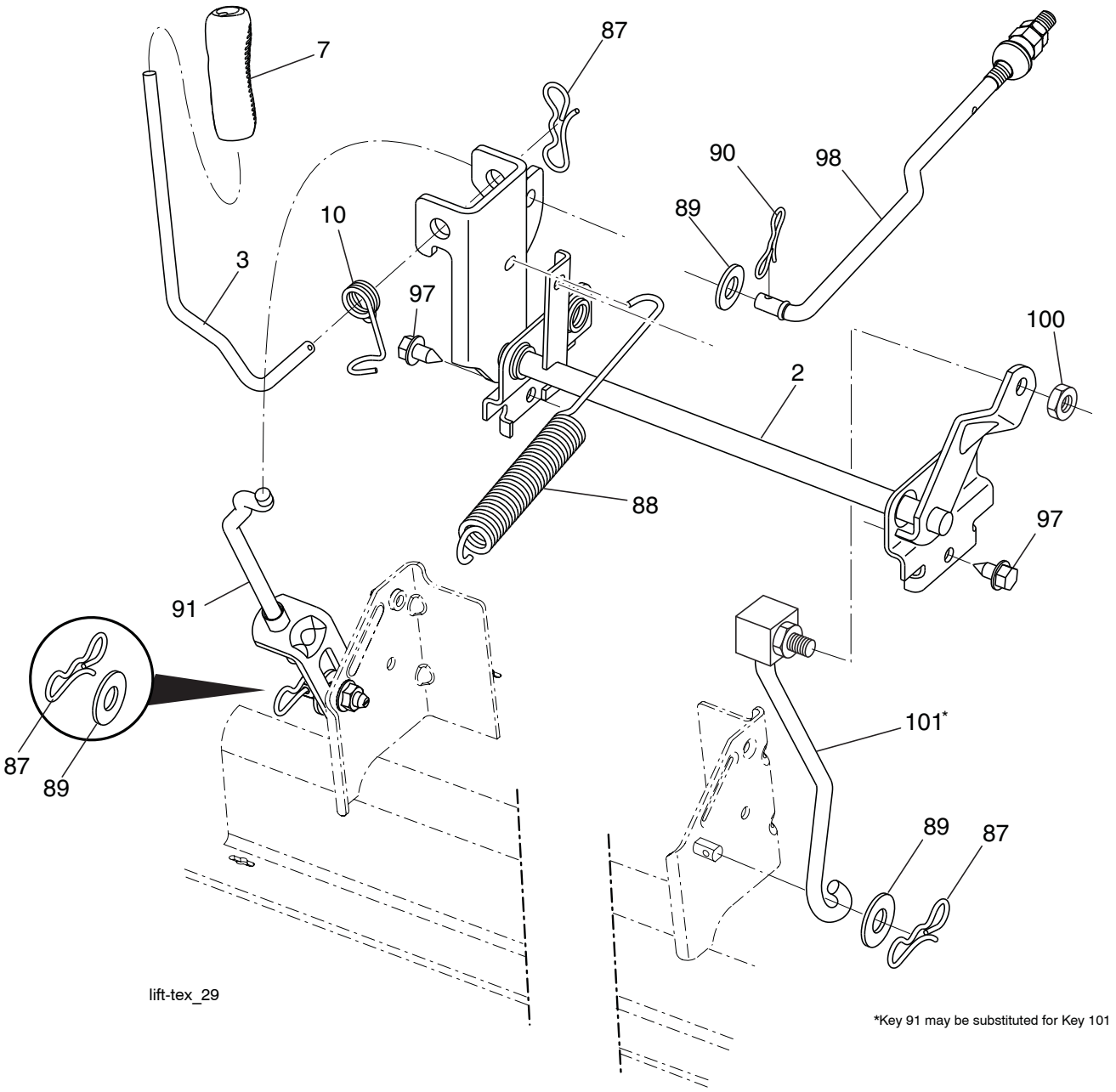

KEY NO.	PART NO.	DESCRIPTION
2	532 43 69-96	Deck Lift Weldment
3	532 19 52-31	Lever Asm., Lift RH
7	580 96 23-01	Grip, Lever
10	532 19 63-14	Spring Torsion
87	532 19 42-09	Pin Cotter 7/16 Bow Tie Lock
88	532 44 54-96	Spring Lift Assist
89	819 19 19-12	Washer Clear Zinc
90	532 19 42-08	Pin Cotter 5/16 Bow Tie Lock

KEY NO.	PART NO.	DESCRIPTION
91	532 19 51-81	Link Lift Susp. Mower Rear
97	817 49 06-08	Screw 3/8-16 x 1/2
98	532 19 52-70	Link Lift Susp. Front Mower
100	873 93 06-00	Nut Centerlock 3/8-16
101	532 40-70-03	Link Asm. Lift FXD

NOTE: All component dimensions given in U.S. inches
1 inch = 25.4 mm

SEAT ASSEMBLY 42

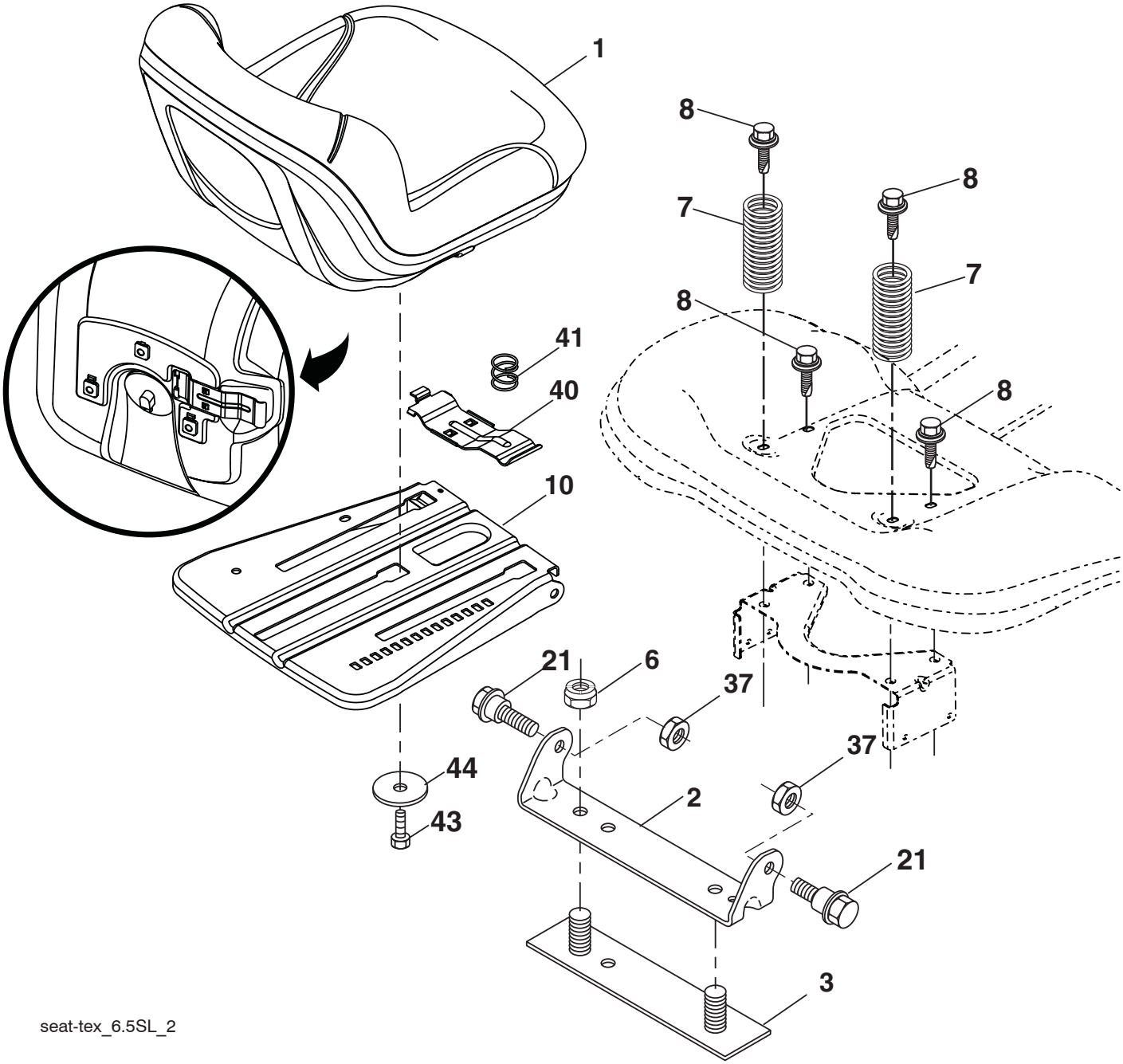

KEY NO.	PART NO.	DESCRIPTION
1	532 40 66-25	Seat
2	532 18 01-66	Bracket Pivot Fender
3	532 14 06-75	Strap, Asm. Fender
6	873 80 06-00	Nut, Lock w/Ins. 3/8-16 unc
7	532 12 41-81	Spring, Seat Cprsn.
8	532 17 18-77	Bolt 5/16-18 unc x 3/4 w/Sems.
10	532 19 69-77	Pan, Seat
21	532 17 18-52	Bolt, Shoulder 5/16-18
37	873 80 05-00	Nut, Lock 5/16-18 unc
40	532 19 76-61	Handle
41	532 19 82-00	Spring
43	874 76 06-12	Bolt 3/8-16 unc x 3/4
44	819 13 38-12	Washer 13/32 x 2-3/8 x 12 Ga.

NOTE: All component dimensions given in U.S. inches
1 inch = 25.4 mm

BAGGER 46

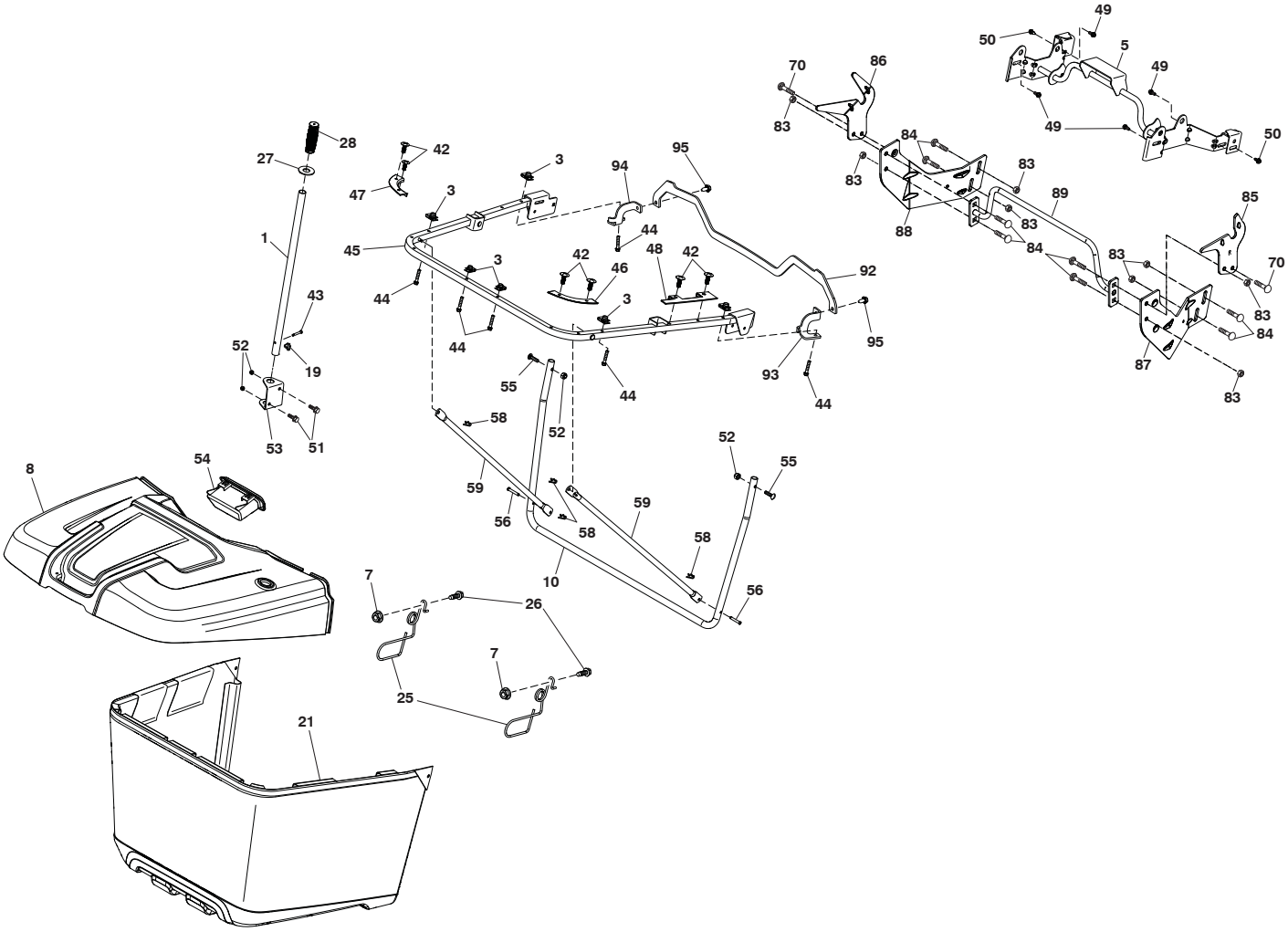
28
27
1
43
19
52
53
51
42
47
3
45
44
3
42
46
44
48
42
3
94
95
92
95
93
44
55
52
58
59
56
58
59
58
10
52
55
56
7
26
7
25
21
8
54
49
50
5
49
49
50
70
86
83
84
83
88
83
89
83
84
85
83
70
83
84
87
83
Bagger_TexCRD-Gen2_8

BAGGER 46

KEY NO.	PART NO.	DESCRIPTION
1	532 42 86-10	Tube Handle Bagger
3	532 17 48-14	Nut Push
5	532 44 37-62	Frame Asm Top Bagger
7	873 90 04-00	Nut Hex Flange 1/4-20 unc
8	532 44 78-28	Cover Bagger
10	532 44 37-55	Frame Front
19	532 19 42-08	Cotter Pin 5/16 Bow Tie
21	532 44 41-90	Bag Asm
25	532 44 55-28	Latch Bagger
26	817 49 04-12	Screw Hexwsh Thdrol 1 14~20 x 3/4
27	532 44 55-29	Grommet Rubber
28	532 16 57-87	Grip Handle Black
42	532 44 04-28	Christmas Tree Clip
43	532 12 68-75	Clevis Pin
44	532 19 96-87	Bolt 1/4-20 1.50
45	532 44 37-54	Upper U Frame Weldment
46	532 44 55-41	Bagger Corner Close-Out RH
47	532 44 40-79	Bagger Corner Close-Out LH
48	532 44 40-80	Top Bagger Side Close-Out
49	532 17 18-73	Bolt Shoulder 5/16~ 18 TT
50	532 17 18-77	Bolt 5/16-18 unc x 3/4 W/SEMS
51	872 11 05-06	Bolt RDHDSQNK 5/16-18 unc x 3/4
52	873 80 05-00	Nut Lock HX W/INS 5/16-18 UNC
53	532 44 41-95	Bracket Dump Handle
54	532 44 75-43	Bagger TOP Front Handle
55	872 14 05-12	Bolt Rdhd Sq 5/16-18UNCX1 1/2
56	532 42 03-06	Pin Clevis .1830DX1.26 long
58	532 08 51-79	Clip Retainer PM
59	532 44 47-63	Bagger Spread Tube
70	817 00 06-12	Bolt 3/8-16X3/4
83	873 80 06-00	Nut Lock Hex w/Ins 3/8-16
84	872 11 06-08	Bolt RDHD SQNK 3/8-16 x 1 Gr. 5
85	581 31 44-02	Bracket RH Pivot
86	581 31 43-02	Bracket LH Pivot
87	581 31 48-02	Bracket RH
88	581 31 47-02	Bracket LH
89	581 31 51-02	Weldment Offset Strut
92	586 05 23-02	Bracket Top Support
93	586 05 24-02	Bracket Support RH
94	586 05 25-02	Bracket Support LH
95	817 00 05-12	Screw 5/16-18 x 3/4

NOTE: All component dimensions given in U.S. inches
1 inch = 25.4 mm