Jonsered®

SPARE PARTS LIST

FRONTRIDERS

FR2218 FA, 967179201, 2013

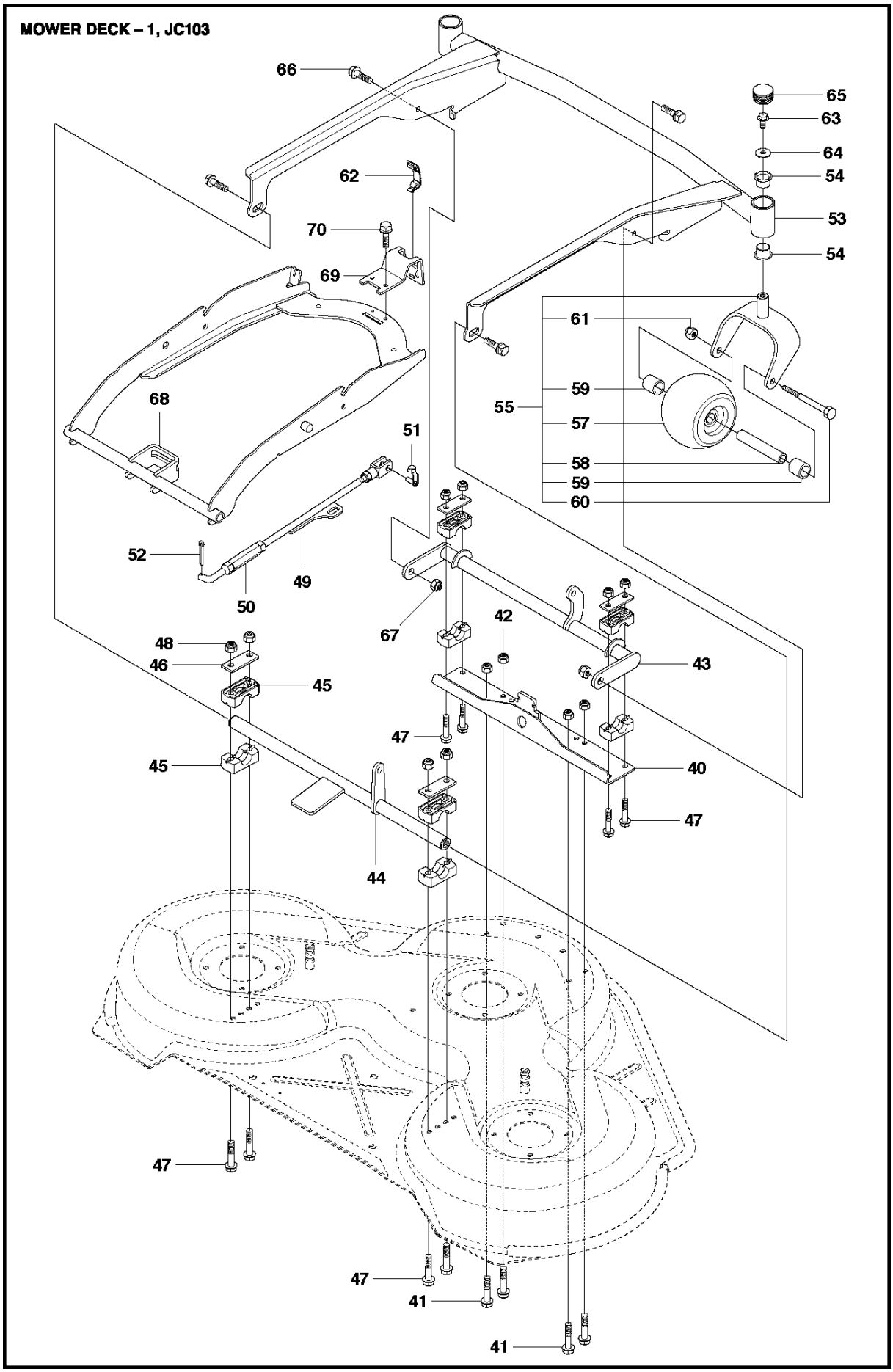
MOWER DECK – 1, JC103
66
65
63
64
54
62
53
70
54
69
61
59
55
57
68
58
59
60
51
52
49
50
67
42
48
43
46
45
47
45
40
47
44
47
47
41
41

Ref	Part No	Description	Remark	QTY	KIT
40	523 09 53-02	BRACKET		1	
41	725 24 51-71	SCREW EHHM		4	
42	732 21 18-01	LOCK NUT		4	
43	502 64 18-06	CROSS BAR		1	
44	523 09 45-04	CROSS BAR		1	
45	506 86 96-01	BEARING		8	
46	506 81 38-01	REINFORCING PLATE		4	
47	725 24 61-51	SCREW EHHM		8	
48	732 21 18-01	LOCK NUT		8	
49	523 11 42-01	PARALLELL ROD ASSY		1	
50	502 64 23-01	PARALLEL ROD		1	
51	506 83 98-01	GAFFELLÄNK		1	
52	721 61 83-01	SPLIT PIN		1	
53	523 08 65-04	DECK FRAME		1	
54	574 56 19-01	BEARING		4	
55	574 21 01-02	PIVOT WHEEL ASSY		2	
57	506 96 30-01	WHEEL ASSY		1	55
58	506 81 08-02	WHEEL AXLE TUBE		1	55
59	506 87 41-02	SPACER		2	55
60	725 25 19-51	SCREW EHHM		1	55
61	732 21 20-51	NUT		1	55
62	503 89 47-02	SNÄPPE		1	
63	506 57 01-04	SCREW EHHFM		1	
64	734 11 64-41	WASHER		1	
65	574 03 48-01	PLUG		1	
66	725 23 68-61	SCREW EHHFT		1	
67	732 21 18-01	LOCK NUT		1	
68	523 08 75-02	DECK ATTACHMENT		1	
69	523 11 46-01	LOCK		1	
70	725 23 68-61	SCREW EHHFT		1	

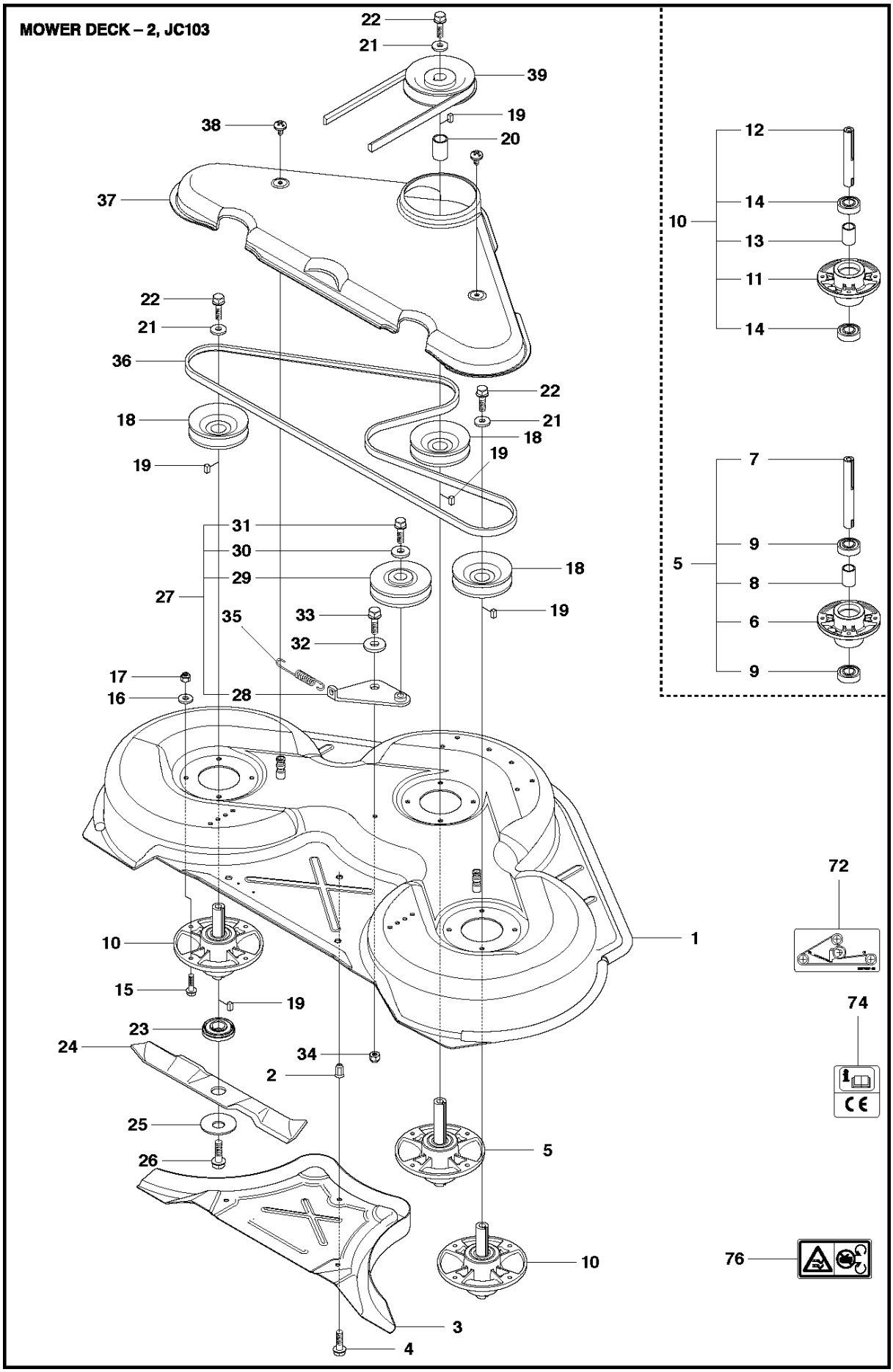
MOWER DECK – 2, JC103
22
21
39
19
20
38
37
22
21
36
18
19
22
21
18
19
31
30
29
27
35
33
32
17
16
28
18
19
12
14
10
13
11
14
7
9
5
8
6
9
72
1
10
15
19
23
24
34
2
25
26
5
10
76
74
3
4

Ref	Part No	Description	Remark	QTY	KIT
1	574 21 08-02	CUTTING DECK		1	
2	506 91 62-01	BLIND RIVET NUT		1	
3	544 44 92-01	PLUG		1	
4	506 57 01-04	SCREW EHHFM		1	
5	576 38 41-01	BLADE HOUSING ASSY		1	
6	576 38 42-01	BEARING HOUSING		1	5
7	576 38 43-01	SHAFT		1	5
8	576 38 44-01	SPACING SLEEVE		1	5
9	738 23 04-34	BALL BEARING		2	5
10	576 38 41-02	BLADE HOUSING ASSY		2	
11	576 38 42-01	BEARING HOUSING		1	10
12	576 38 43-02	SHAFT		1	10
13	576 38 44-01	SPACING SLEEVE		1	10
14	738 23 04-34	BALL BEARING		2	10
15	535 42 38-01	SCREW RSQM		12	
16	734 11 64-01	WASHER		12	
17	732 21 18-01	LOCK NUT		12	
18	506 92 21-01	PULLEY		3	
19	506 53 35-01	PARALLEL KEY		7	
20	544 06 80-02	SPACING SLEEVE		1	
21	734 11 74-41	WASHER		3	
22	544 11 41-01	SCREW EHHM		3	
23	535 50 42-02	BLADE BRACKET		3	
24	504 18 82-01	RIDE ON BLADE		3	
25	506 79 23-01	KNIFE PLATE		3	
26	544 11 41-01	SCREW EHHM		3	
27	506 54 07-01	BELT TENSIONER ASSY		1	
28	506 51 95-01	SPÄNNARM KPL.		1	27
29	506 53 27-01	PULLEY		1	27
30	734 11 64-41	WASHER		1	27
31	506 55 83-02	SCREW EHHFT		1	27
32	506 91 87-02	WASHER		1	
33	725 24 51-71	SCREW EHHM		1	
34	732 21 18-01	LOCK NUT		1	
35	506 53 31-01	SPRING		1	
36	506 76 85-01	DRIVE BELT		1	
37	544 09 61-02	BELT COVER		1	
38	544 40 05-01	SCREW		2	
39	506 77 86-01	PULLEY		1	
72	506 78 97-01	LABEL		1	
74	506 92 90-01	LABEL		1	
76	574 51 00-01	DECAL		2	

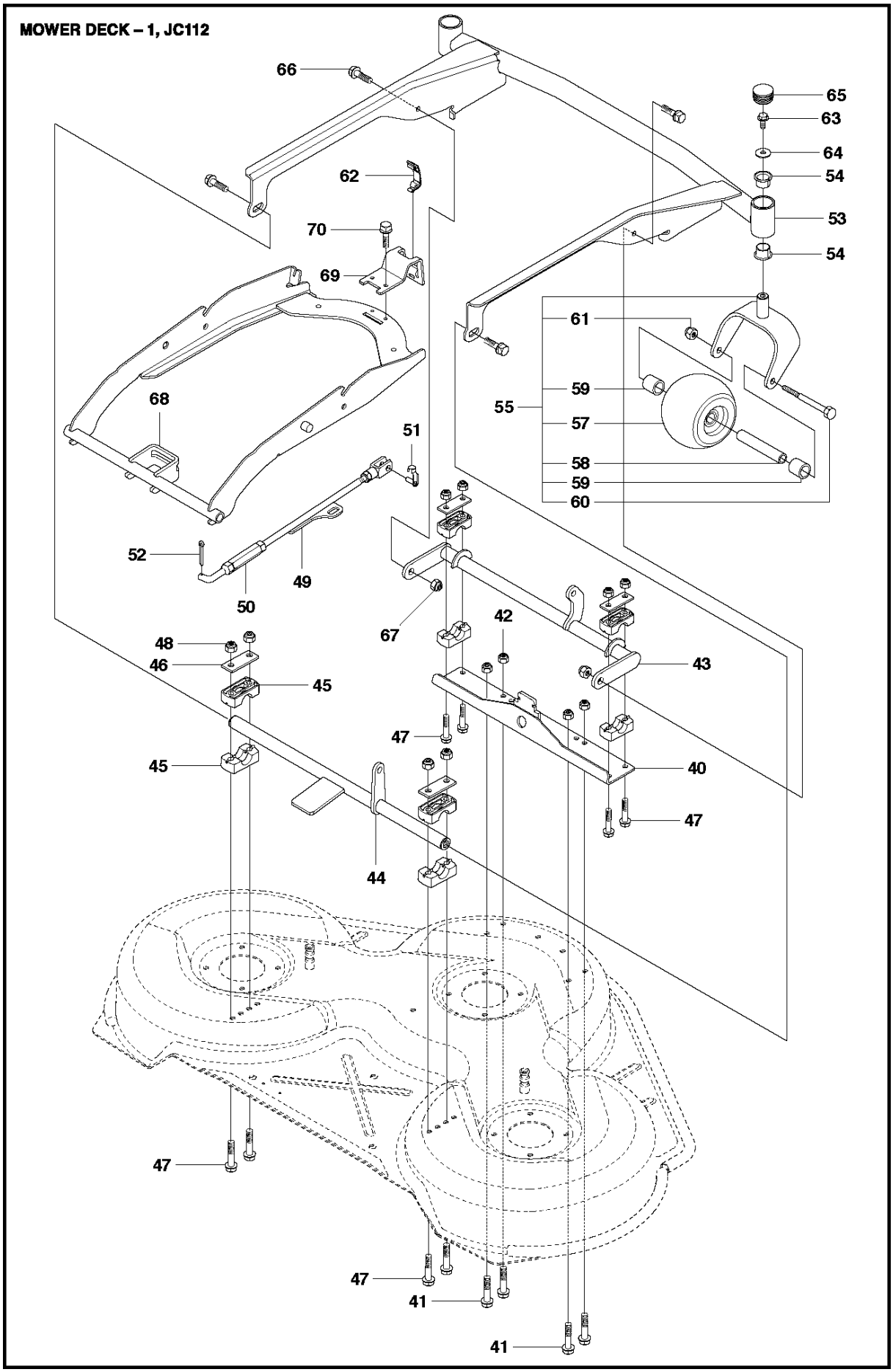
MOWER DECK – 1, JC112
66
65
63
64
54
62
53
70
54
69
61
59
55
57
68
58
59
60
51
52
49
50
67
42
48
43
46
45
47
45
40
47
44
47
47
41
41

Ref	Part No	Description	Remark	QTY	KIT
40	523 09 53-02	BRACKET		1	
41	725 24 51-71	SCREW EHHM		4	
42	732 21 18-01	LOCK NUT		4	
43	502 64 18-06	CROSS BAR		1	
44	523 09 45-04	CROSS BAR		1	
45	506 86 96-01	BEARING		8	
46	506 81 38-01	REINFORCING PLATE		4	
47	725 24 61-51	SCREW EHHM		8	
48	732 21 18-01	LOCK NUT		8	
49	523 11 42-01	PARALLELL ROD ASSY		1	
50	502 64 23-01	PARALLEL ROD		1	
51	506 83 98-01	GAFFELLÄNK		1	
52	721 61 83-01	SPLIT PIN		1	
53	523 08 65-04	DECK FRAME		1	
54	574 56 19-01	BEARING		4	
55	574 21 01-02	PIVOT WHEEL ASSY		2	
57	506 96 30-01	WHEEL ASSY		1	55
58	506 81 08-02	WHEEL AXLE TUBE		1	55
59	506 87 41-02	SPACER		2	55
60	725 25 19-51	SCREW EHHM		1	55
61	732 21 20-51	NUT		1	55
62	503 89 47-02	SNÄPPE		1	
63	506 57 01-04	SCREW EHHFM		2	
64	734 11 64-41	WASHER		2	
65	574 03 48-01	PLUG		2	
66	725 23 68-61	SCREW EHHFT		4	
67	732 21 18-01	LOCK NUT		2	
68	523 08 75-02	DECK ATTACHMENT		1	
69	523 11 46-01	LOCK		1	
70	725 23 68-61	SCREW EHHFT		2	

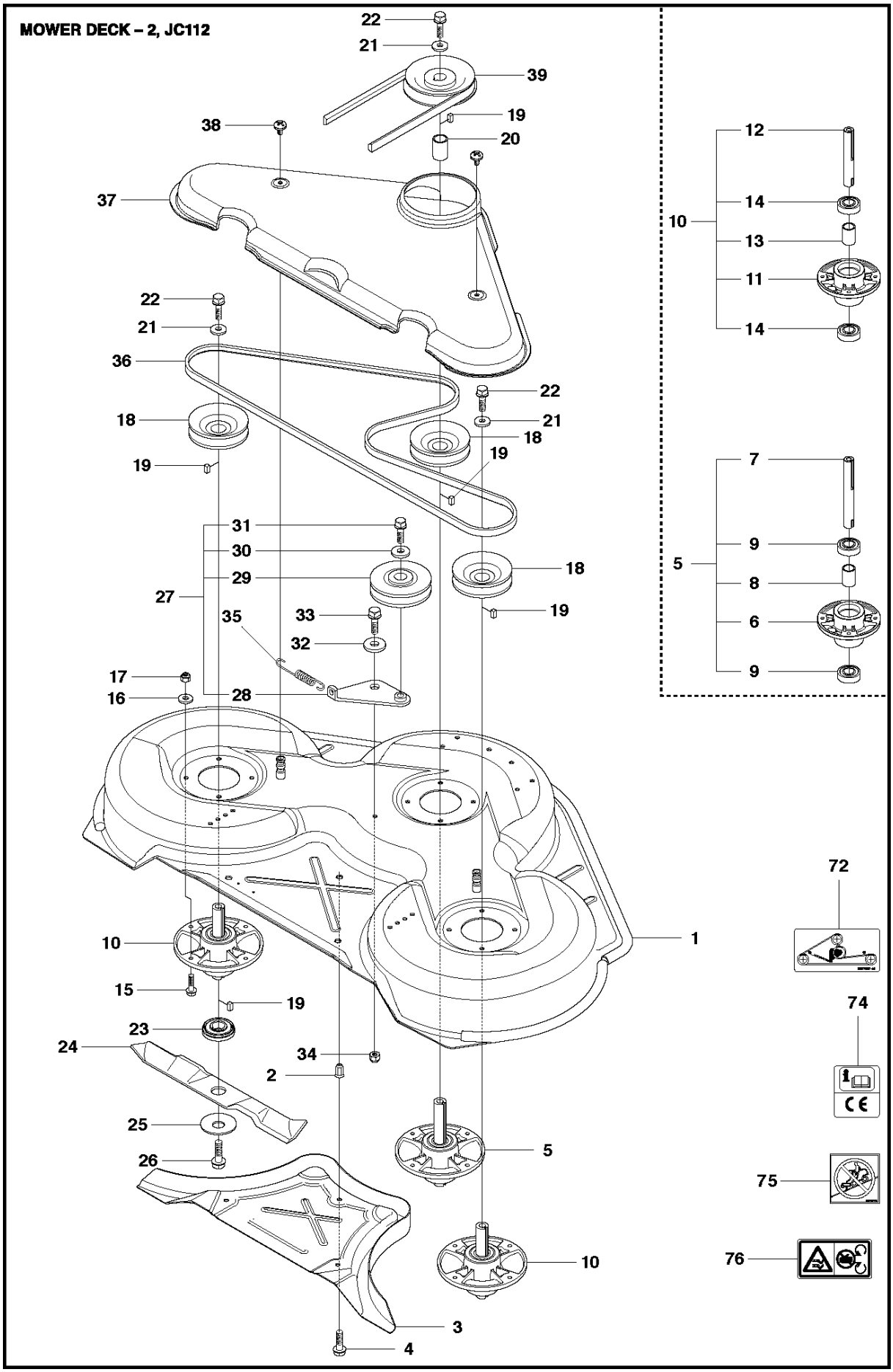
MOWER DECK – 2, JC112
22
21
39
19
20
38
37
12
14
10
13
11
14
22
21
36
22
18
21
18
19
19
7
31
9
30
5
18
29
8
27
19
33
6
35
32
9
17
16
28
1
72
10
15
19
74
23
24
34
2
25
5
26
75
10
76
3
4

Ref	Part No	Description	Remark	QTY	KIT
1	574 20 95-02	CUTTING DECK		1	
2	506 91 62-01	BLIND RIVET NUT		1	
3	544 44 93-01	PLUG		1	
4	506 57 01-04	SCREW EHHFM		1	
5	576 38 41-01	BLADE HOUSING ASSY		1	
6	576 38 42-01	BEARING HOUSING		1	5
7	576 38 43-01	SHAFT		1	5
8	576 38 44-01	SPACING SLEEVE		1	5
9	738 23 04-34	BALL BEARING		2	5
10	576 38 41-02	BLADE HOUSING ASSY		2	
11	576 38 42-01	BEARING HOUSING		1	10
12	576 38 43-02	SHAFT		1	10
13	576 38 44-01	SPACING SLEEVE		1	10
14	738 23 04-34	BALL BEARING		2	10
15	535 42 38-01	SCREW RSQM		12	
16	734 11 64-01	WASHER		12	
17	732 21 18-01	LOCK NUT		12	
18	506 92 21-01	PULLEY		3	
19	506 53 35-01	PARALLEL KEY		7	
20	544 06 80-02	SPACING SLEEVE		1	
21	734 11 74-41	WASHER		3	
22	544 11 41-01	SCREW EHHM		3	
23	535 50 42-02	BLADE BRACKET		3	
24	544 10 28-01	RIDE ON BLADE		3	
25	506 79 23-01	KNIFE PLATE		3	
26	544 11 41-01	SCREW EHHM		3	
27	506 54 07-01	BELT TENSIONER ASSY		1	
28	506 51 95-01	SPÄNNARM KPL.		1	27
29	506 53 27-01	PULLEY		1	27
30	734 11 64-41	WASHER		1	27
31	506 55 83-02	SCREW EHHFT		1	27
32	506 91 87-02	WASHER		1	
33	725 24 51-71	SCREW EHHM		1	
34	732 21 18-01	LOCK NUT		1	
35	506 53 31-01	SPRING		1	
36	535 41 19-01	BELT		1	
37	544 09 62-02	BELT COVER		1	
38	544 40 05-01	SCREW		2	
39	506 77 86-01	PULLEY		1	
72	506 78 97-01	LABEL		1	
74	506 92 90-01	LABEL		1	
75	535 43 74-01	LABEL WARNING		1	
76	574 51 00-01	DECAL		2	

CHASSIS

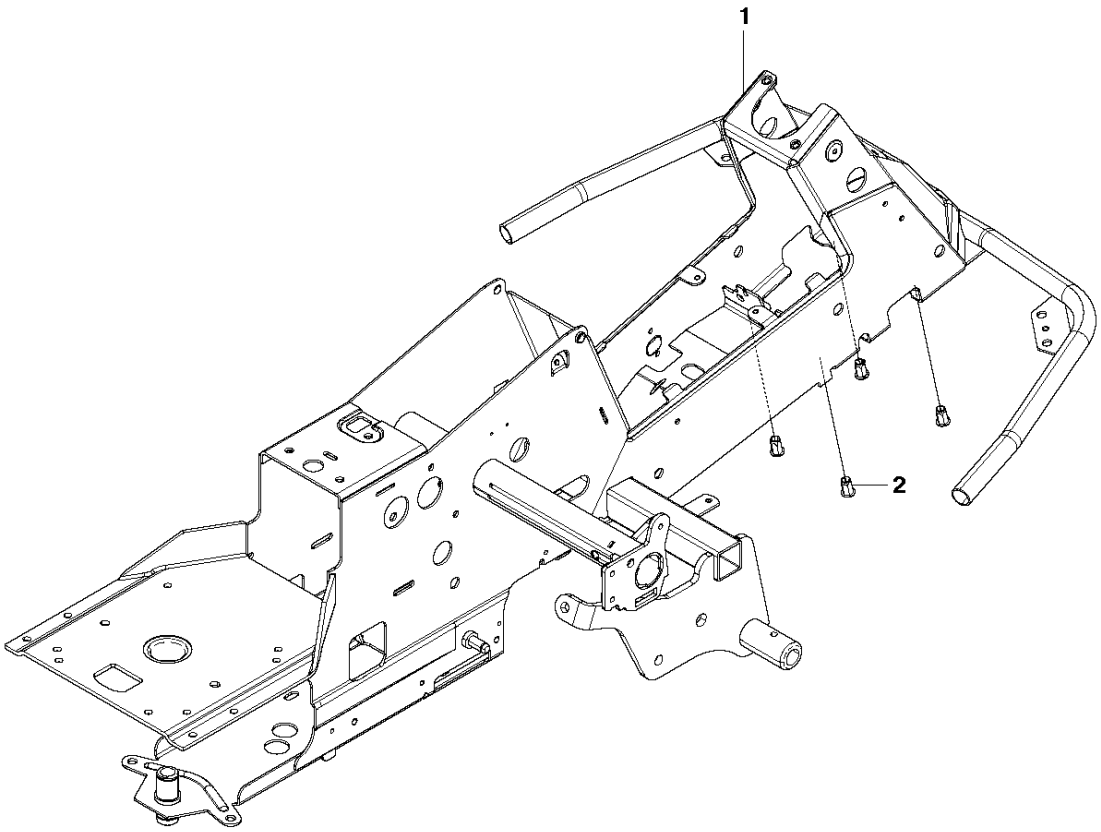

Ref	Part No	Description	Remark	QTY KIT
1	577 93 90-02	CHASSIS		1
2	506 91 62-01	BLIND RIVET NUT		4

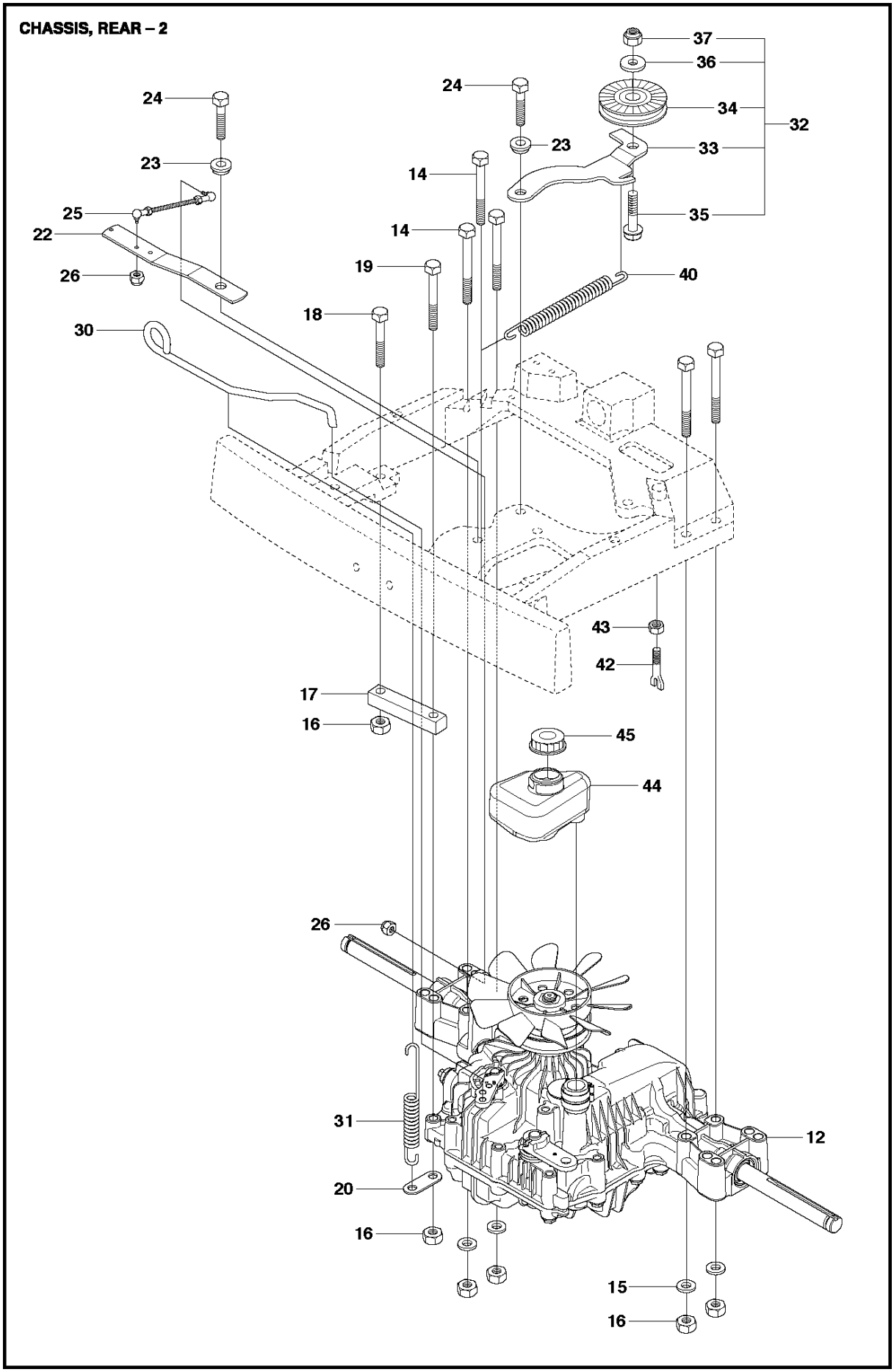
CHASSIS, REAR – 2
37
36
24
24
34
32
23
23
33
14
25
35
14
22
19
40
26
18
30
43
42
17
16
45
44
26
31
12
20
16
15
16

Ref	Part No	Description	Remark	QTY	KIT
12	506 98 63-01	TRANSMISSION		1	
14	725 24 67-51	SCREW EHHM		5	
15	734 11 64-01	WASHER		4	
16	731 23 18-01	HEXAGON NUT		6	
17	506 98 72-01	MOMENTFÄSTE		1	
18	725 24 59-51	SCREW EHHM		1	
19	725 24 62-51	SCREW EHHM		1	
20	506 59 93-01	LINK		1	
22	506 98 74-03	LEVER		1	
23	506 91 87-02	WASHER		2	
24	725 24 51-51	SCREW		2	
25	506 98 75-01	ADJUSTING ROD		1	
26	732 21 14-01	LOCK NUT		2	
30	506 98 82-01	FRIKOPPLINGSSTÅNG		1	
31	506 83 43-01	SPRING		1	
32	506 98 84-01	BELT TENSIONER ASSY		1	
33	506 98 85-01	BELT TENSIONER		1	32
34	506 94 69-01	BELT TENS WHEEL ASSY		1	32
35	725 24 55-51	SCREW		1	32
36	734 11 64-41	WASHER		1	32
37	732 21 18-01	LOCK NUT		1	32
40	506 98 86-01	SPRING		1	
42	506 98 88-01	PENDULUM		1	
43	731 23 20-51	HEXAGON NUT		1	
44	506 98 90-01	EXPANSION TANK		1	
45	506 98 80-01	TANK CAP ASSY		1	

CHASSIS, REAR – 1

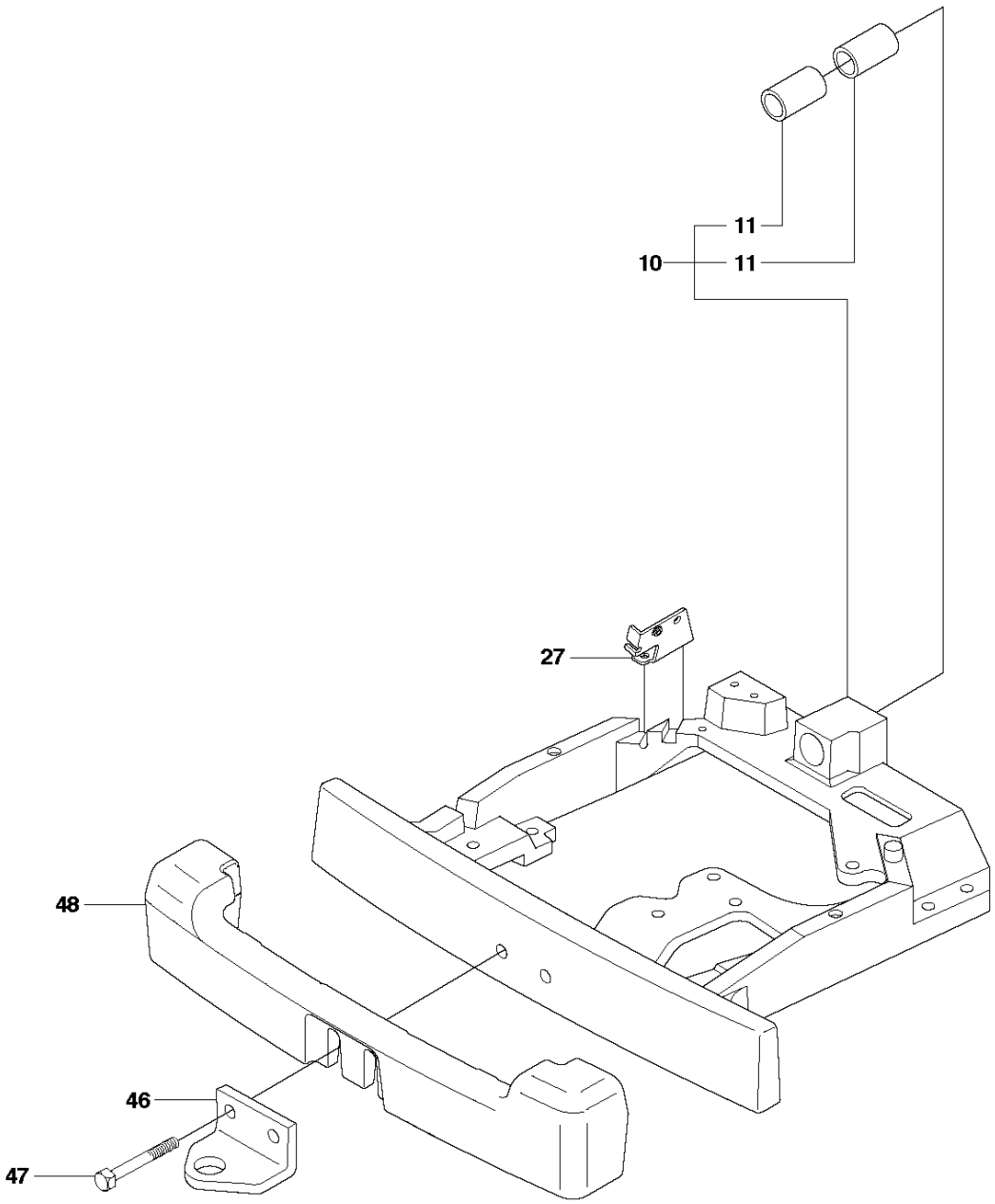

Ref	Part No	Description	Remark	QTY	KIT
10	535 40 60-02	BRACKET		1	
11	506 98 61-02	GLIDLAGER		2	10
27	506 98 77-01	BRACKET		1	
46	506 88 99-01	HITCH		1	
47	725 25 00-51	SCREW EHHM		2	
48	544 03 96-03	COUNTERWEIGHT		1	

CONTROLS

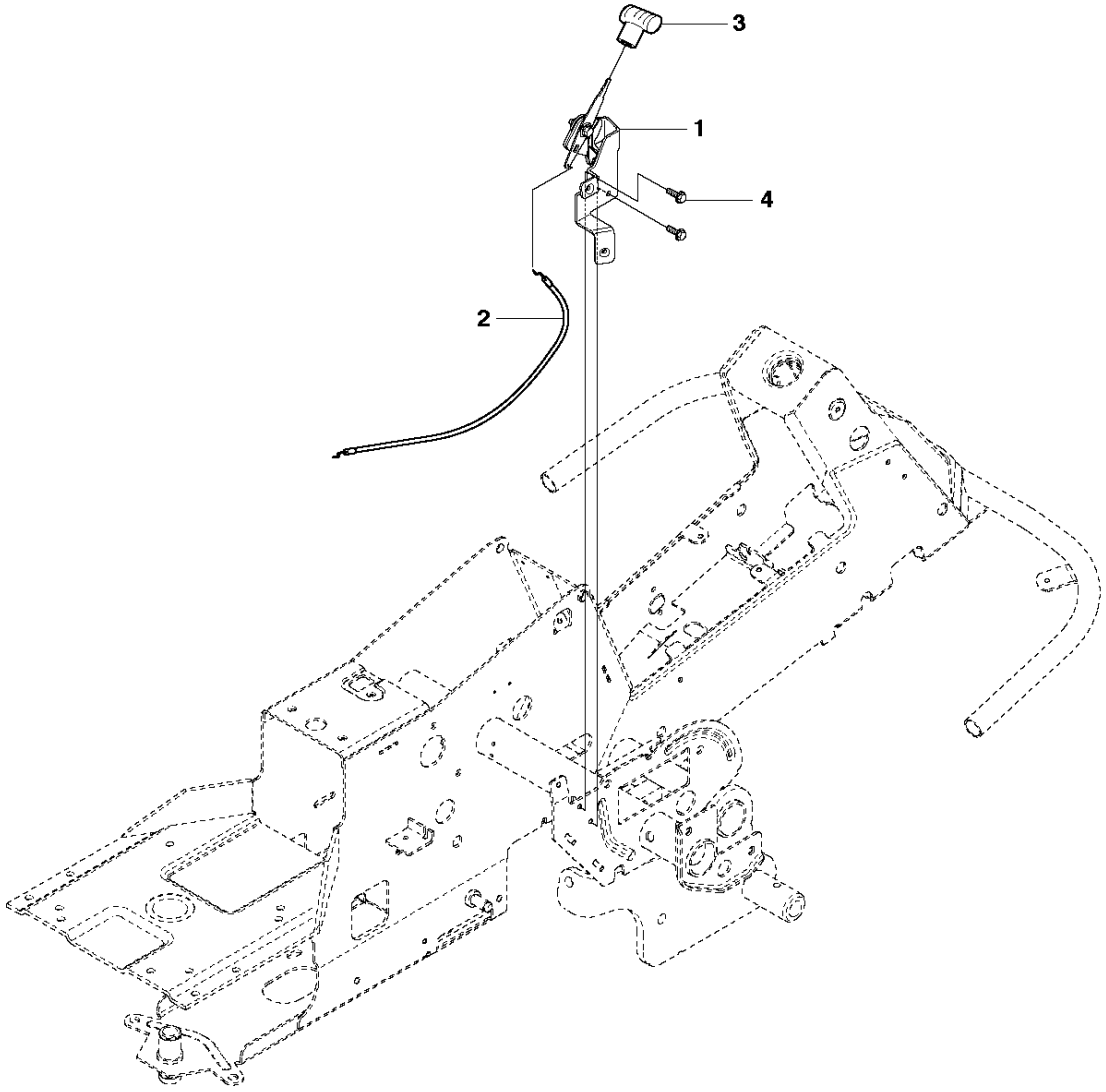

Ref	Part No	Description	Remark	QTY KIT
1	502 29 56-01	THROTTLE CONTROL		1
2	544 30 17-01	WIRE		1
3	506 88 91-01	KNOB		1
4	725 23 64-61	SCREW EHHFT		2

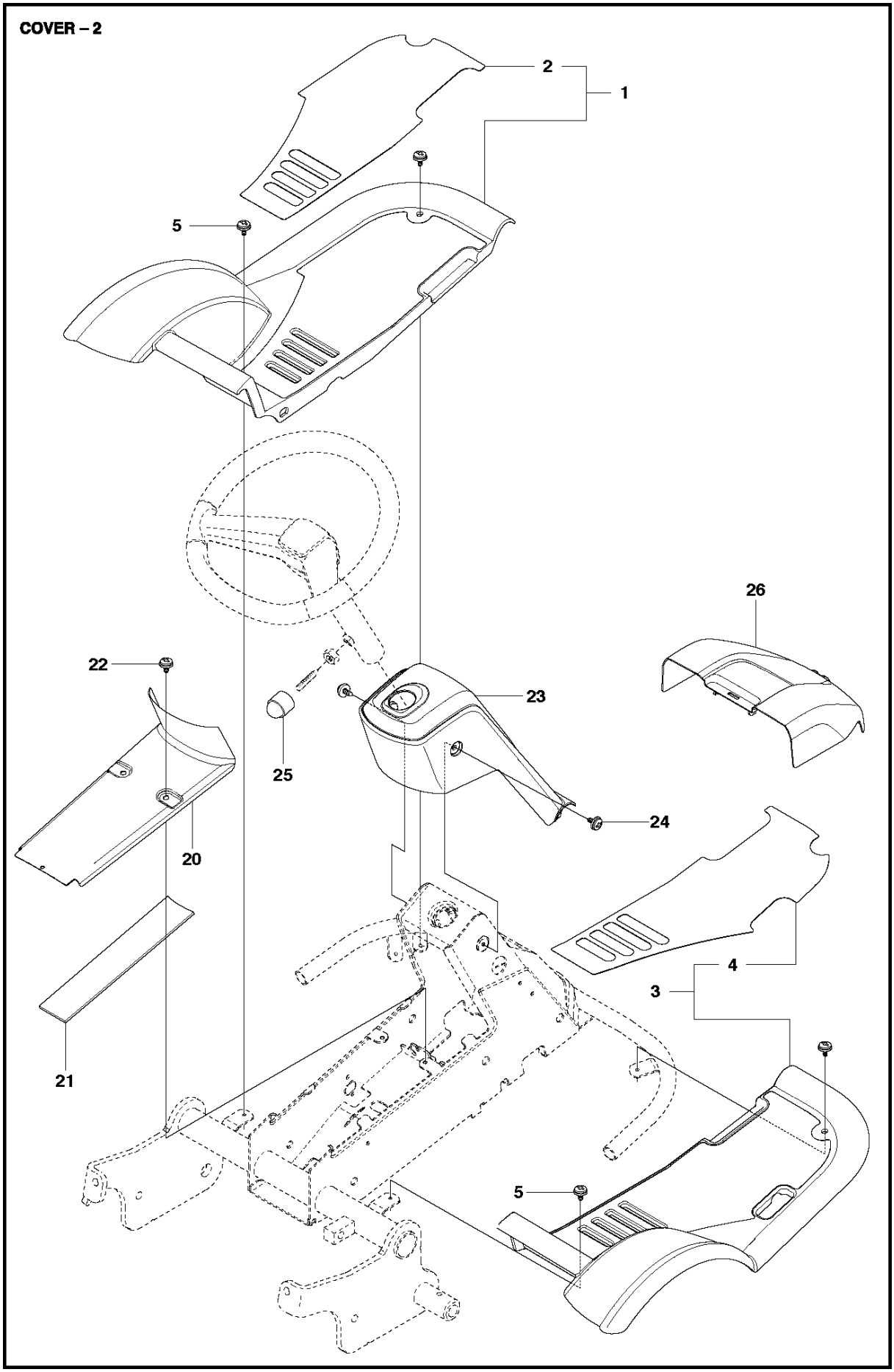
COVER – 2
2
1
5
26
22
23
25
24
20
4
3
21
5

Ref	Part No	Description	Remark	QTY	KIT
1	504 05 92-01	FOOT PLATE		1	
2	504 06 02-01	MAT		1	1
3	504 05 93-02	FOOT PLATE		1	
4	504 06 02-03	MAT		1	3
5	544 40 05-01	SCREW		4	
20	544 23 92-02	COVER		1	
21	544 42 75-01	MAT		1	
22	544 40 05-01	SCREW		2	
23	504 06 01-01	COVER		1	
24	544 40 05-01	SCREW		2	
25	544 43 32-02	PROTECTIVE COVER		1	
26	525 56 24-02	UNIT COVER		1	

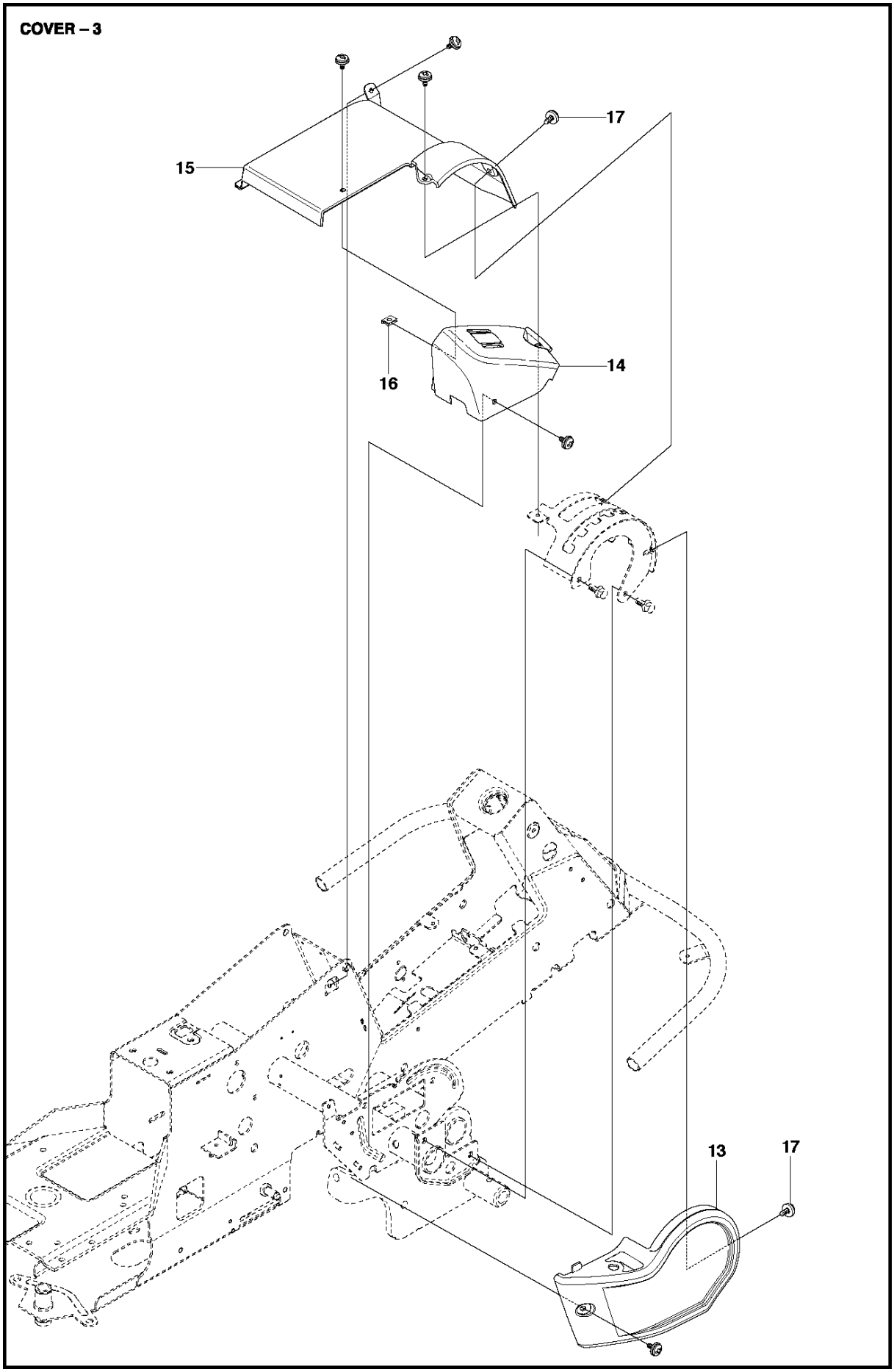
COVER – 3
17
15
14
16
13
17

Ref	Part No	Description	Remark	QTY KIT
13	504 05 95-01	CONTROL COVER		1
14	504 05 97-02	CONTROL COVER		1
15	504 05 98-02	COVER		1
16	535 42 91-01	SPRING NUT		1
17	544 40 05-01	SCREW		7

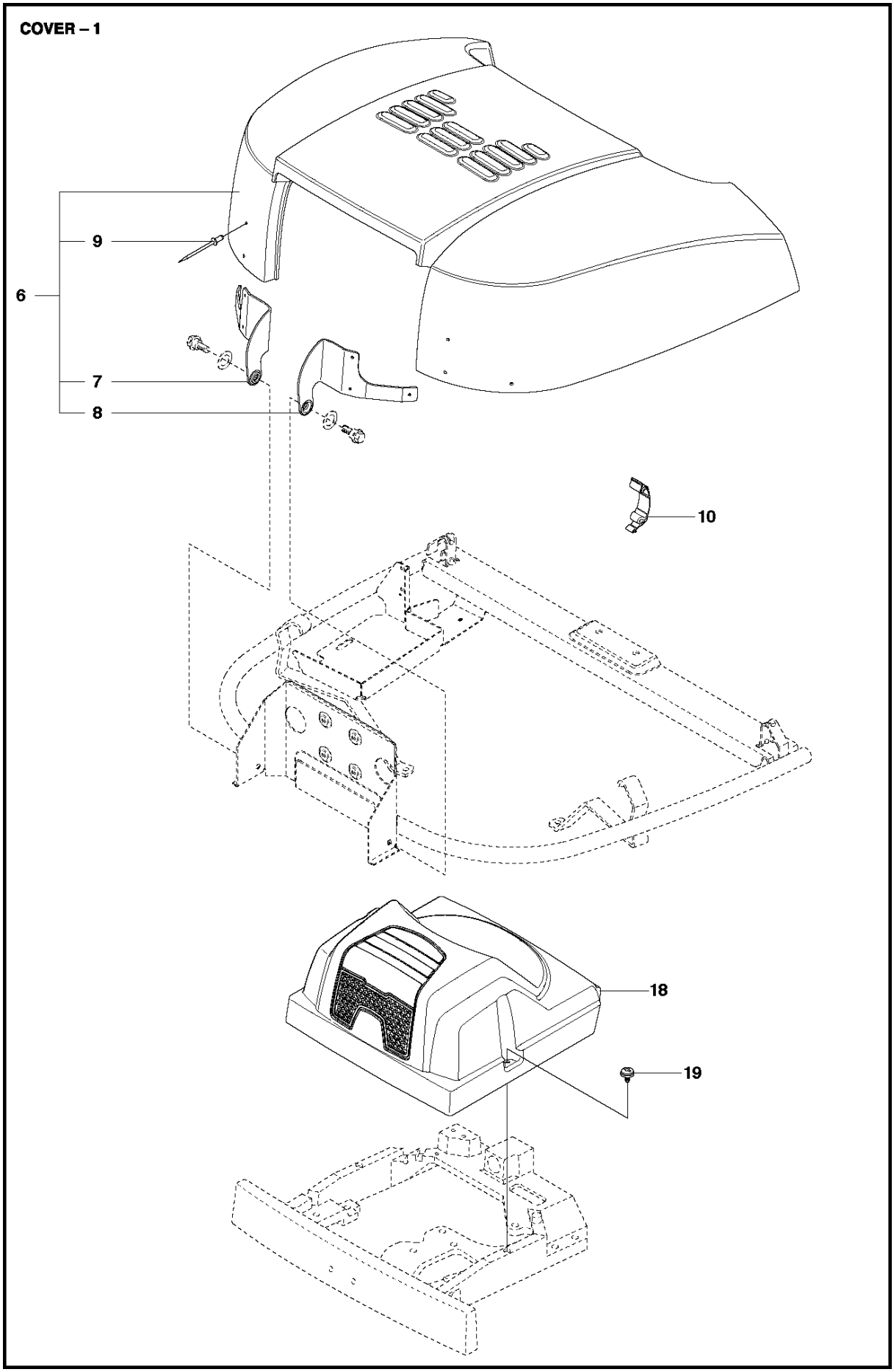
COVER – 1
6
9
7
8
10
18
19

Ref	Part No	Description	Remark	QTY	KIT
6	535 41 90-04	ENGINE HOOD ASSY		1	
7	535 41 99-01	HINGE		1	6
8	535 41 99-02	HINGE		1	6
9	722 79 54-02	RIVET		6	6
10	503 89 47-02	SNÄPPE		1	
18	578 26 12-02	TRANSMISSION COVER		1	
19	574 85 62-01	SCREW		2	

DECALS

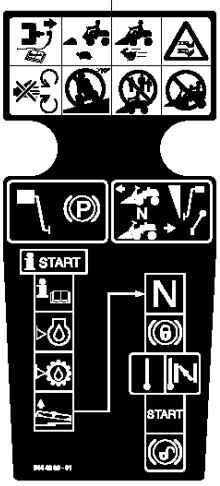
1
START
N
START

2
START

3

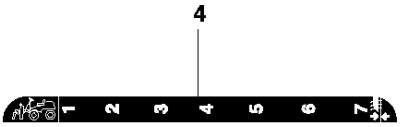
4
1 2 3 4 5 6 7

5

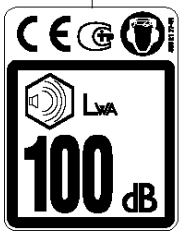
6
LWA
100 dB

7
Jonsered

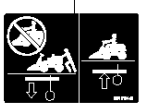
8

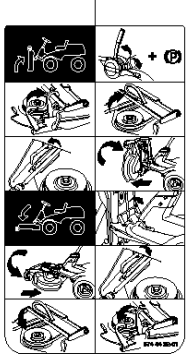
9

10
FR 2218 FA

11
Jonsered

Ref	Part No	Description	Remark	QTY KIT
1	544 43 86-01	LABEL		1
2	502 29 14-01	LABEL		1
3	544 43 88-02	LABEL		1
4	544 43 90-03	LABEL		1
5	544 43 92-02	LABEL		1
6	505 21 77-01	LABEL		1
7	535 43 47-01	DECAL		2
8	544 21 14-01	LABEL		1
9	574 44 32-01	LABEL		1
10	502 29 21-11	LABEL		1
11	574 21 05-01	DECAL		1

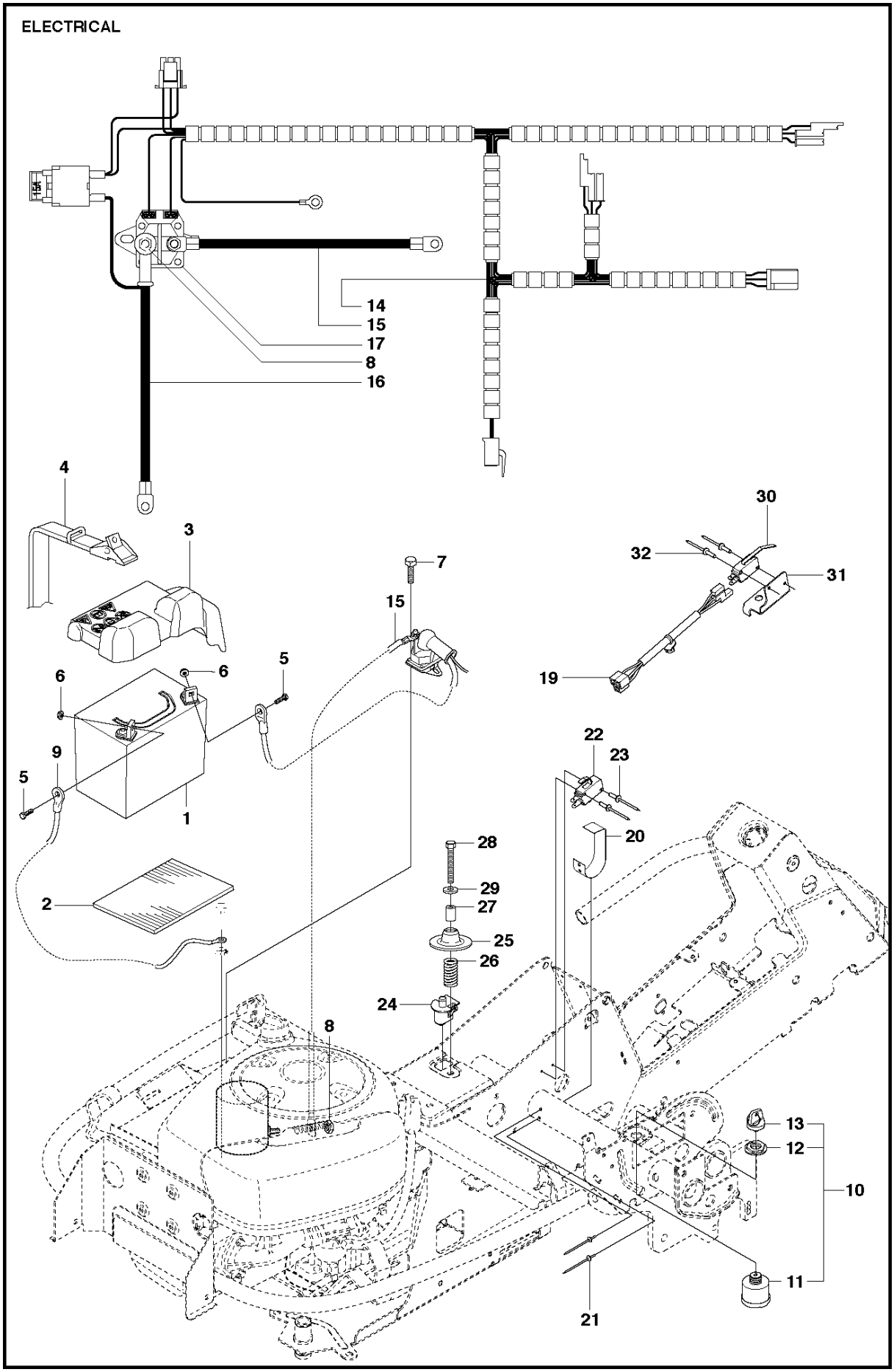
ELECTRICAL
14
15
17
8
16
4
3
7
15
30
32
31
19
6
6
5
9
5
1
22
23
20
28
29
27
25
26
24
2
8
13
12
10
11
21

Ref	Part No	Description	Remark	QTY	KIT
1	510 13 85-01	BATTERY		1	
2	535 44 11-01	BATTERY MAT		1	
3	510 02 69-01	COVER		1	
4	506 83 68-02	BATTERY BELT		1	
5	522 62 21-01	SCREW EHHM		2	
6	522 62 43-01	NUT		2	
7	725 23 64-61	SCREW EHHFT		1	
8	506 89 98-01	NUT		3	
9	544 96 76-03	CABLE		1	
10	544 44 21-01	IGNITION SWITCH		1	
11	544 44 22-01	IGNITION SWITCH		1	10
12	544 44 23-01	NUT		1	10
13	544 44 24-01	IGNITION KEY		1	10
14	578 33 83-01	WIRING		1	
15	544 92 86-01	CABLE		1	
16	544 92 61-04	CABLE		1	
17	544 43 98-01	RELAY		1	
19	576 18 54-01	WIRING		1	
20	506 90 93-01	PLATE SPRING		1	
21	722 78 39-02	BLIND RIVET		2	
22	574 31 60-01	SWITCH		1	
23	544 44 07-01	RIVET		2	
24	506 90 96-01	SWITCH		1	
25	506 90 97-01	SPRING WASHER		1	
26	544 44 12-01	SPRING		1	
27	506 90 99-02	SPACING TUBE		1	
28	725 24 60-51	SCREW EHHM		1	
29	734 11 64-01	WASHER		1	
30	574 31 61-01	SWITCH		1	
31	544 41 57-01	BRACKET		1	
32	544 44 07-01	RIVET		2	

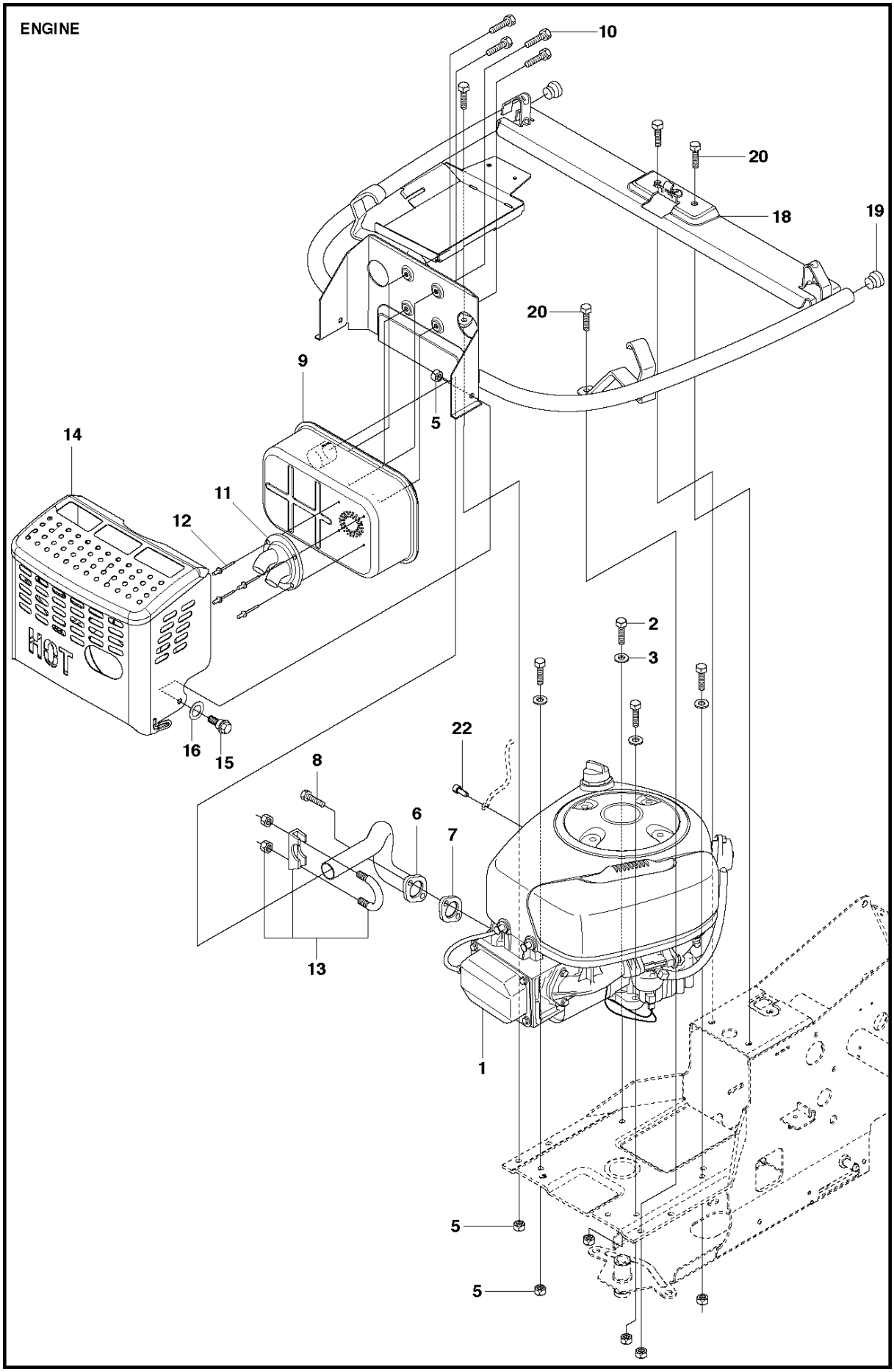
ENGINE
10
20
18
19
20
9
5
14
11
12
HOT
16
15
2
3
22
8
6
7
13
1
5
5

Ref	Part No	Description	Remark	QTY KIT
1	577 34 36-01	ENGINE		1
2	725 24 57-51	SCREW		4
3	734 11 64-01	WASHER		4
5	732 21 18-01	LOCK NUT		8
6	580 66 13-02	EXHAUST PIPE		1
7	506 91 45-01	GASKET		1
8	506 55 63-01	SCREW UNC		2
9	535 40 08-01	MUFFLER ASSY		1
10	725 23 68-61	SCREW EHHFT		4
11	506 82 79-01	DEFLECTOR		1
12	722 79 23-09	RIVET		4
13	506 66 84-01	CLAMP ASSY		1
14	581 62 77-01	HEAT PROTECTOR		1
15	506 59 74-01	SCREW		2
16	506 83 94-01	SPRING WASHER		2
18	578 78 47-01	ENGINE FRAME		1
19	506 81 01-01	PLUG		2
20	506 57 01-04	SCREW EHHFM		4
22	506 55 63-02	SCREW UNC		1

EQUIPMENT FRAME ASSY

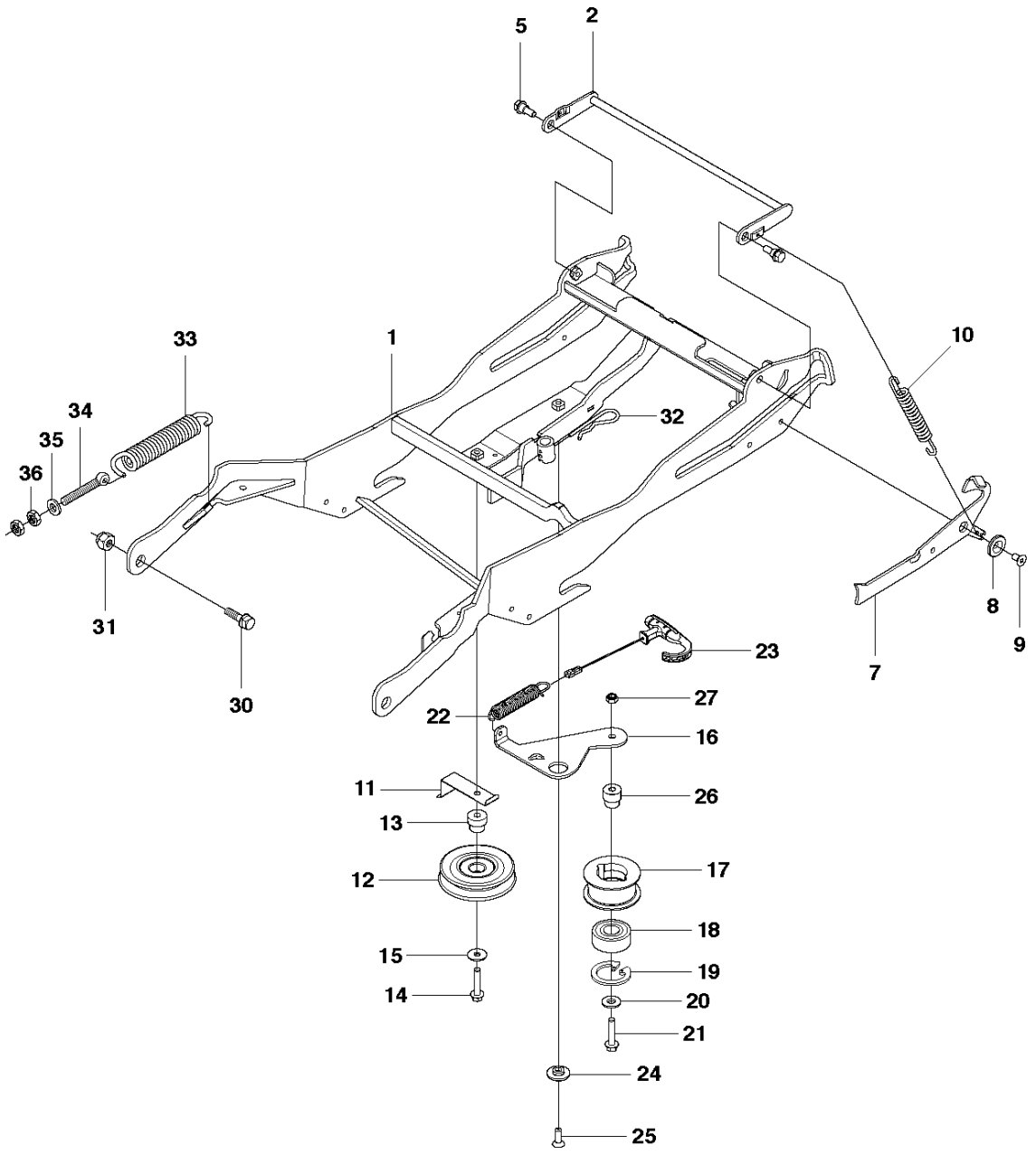

Ref	Part No	Description	Remark	QTY KIT
1	523 06 42-02	EQUIPMENT FRAME		1
2	525 47 59-01	HOOK		1
5	506 59 74-01	SCREW		2
7	523 11 66-02	LEVER		1
8	506 91 87-01	WASHER		1
9	725 64 48-01	SCREW IHCSFM		1
10	506 53 56-03	DRAW SPRING		1
11	525 48 67-01	BELT GUIDE		1
12	506 97 48-01	PULLEY		1
13	506 82 68-02	BUSHING		1
14	725 24 59-51	SCREW EHHM		1
15	734 11 64-41	WASHER		1
16	577 22 87-01	SHEET		1
17	506 92 89-01	PULLEY		1
18	738 21 04-04	BALL BEARING		1
19	735 31 38-10	CIRCLIP		1
20	734 11 64-41	WASHER		1
21	725 24 59-51	SCREW EHHM		1
22	504 62 24-01	SPRING		1
23	504 62 21-02	HANDLE ASSY		1
24	505 45 17-01	WASHER		1
25	725 64 53-01	SCREW IHCSFM		1
26	535 48 48-01	BUSHING		1
27	732 21 18-01	LOCK NUT		1
30	506 89 58-01	COLLAR SCREW		2
31	732 25 22-01	HEXAGON LOCKING NUT		2
32	506 96 66-01	HAIR PIN COTTER		1
33	506 83 76-01	SPRING		2
34	506 83 77-01	RING BOLT		2
35	734 11 72-01	WASHER		2
36	731 23 20-51	HEXAGON NUT		4

FUEL SYSTEM

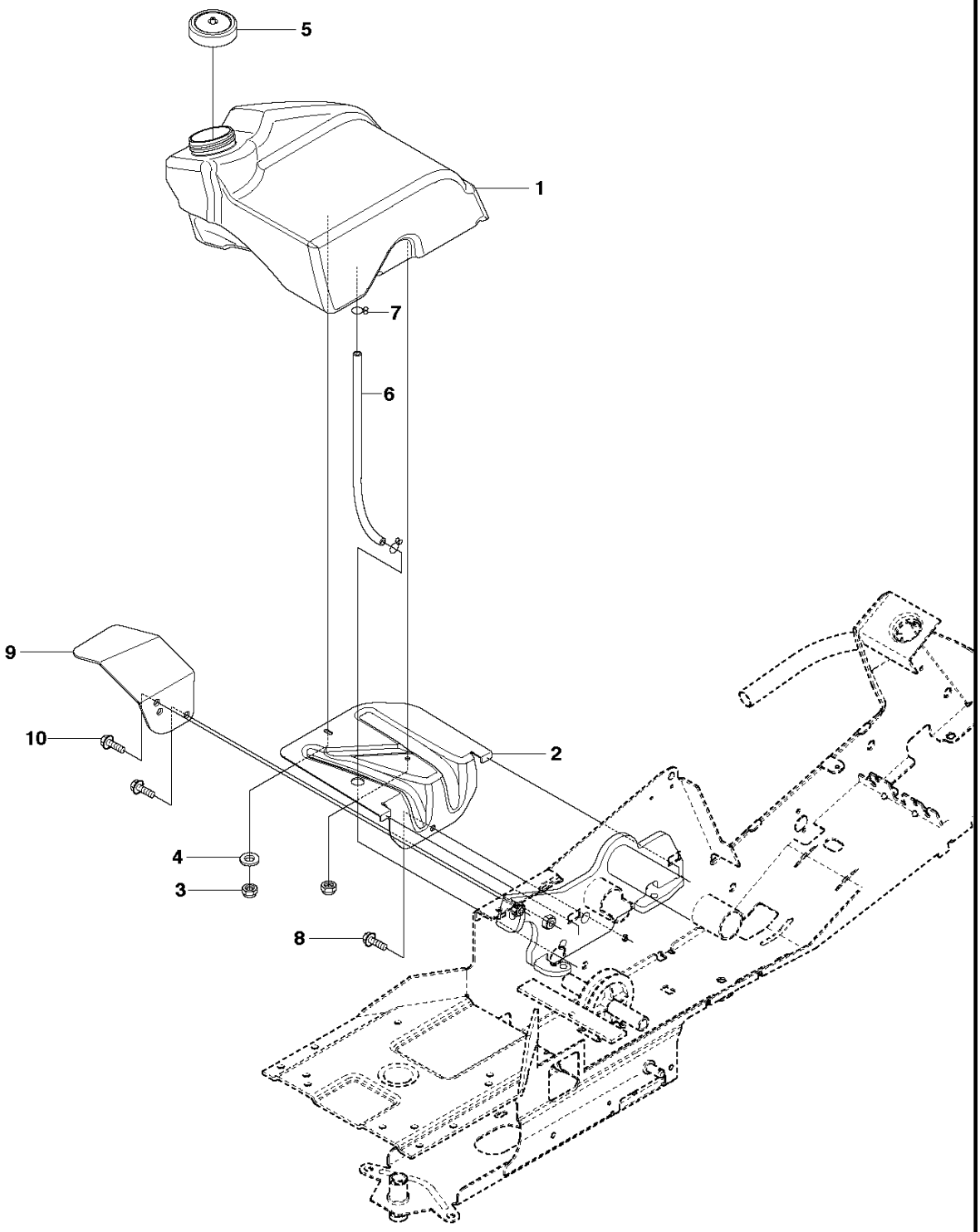

Ref	Part No	Description	Remark	QTY KIT
1	504 05 99-01	FUEL TANK		1
2	544 32 93-01	BRACKET		1
3	732 21 16-01	NUT		2
4	734 11 56-01	WASHER		1
5	506 67 33-01	TANK CAP ASSY		1
6	504 80 00-07	FUEL HOSE		1
7	535 46 97-01	HOSE BRACE		2
8	725 23 64-61	SCREW EHHFT		1
9	504 55 66-01	SUPPORT		1
10	725 24 93-71	SCREW EHHM		2

HEIGHT ADJUSTMENT

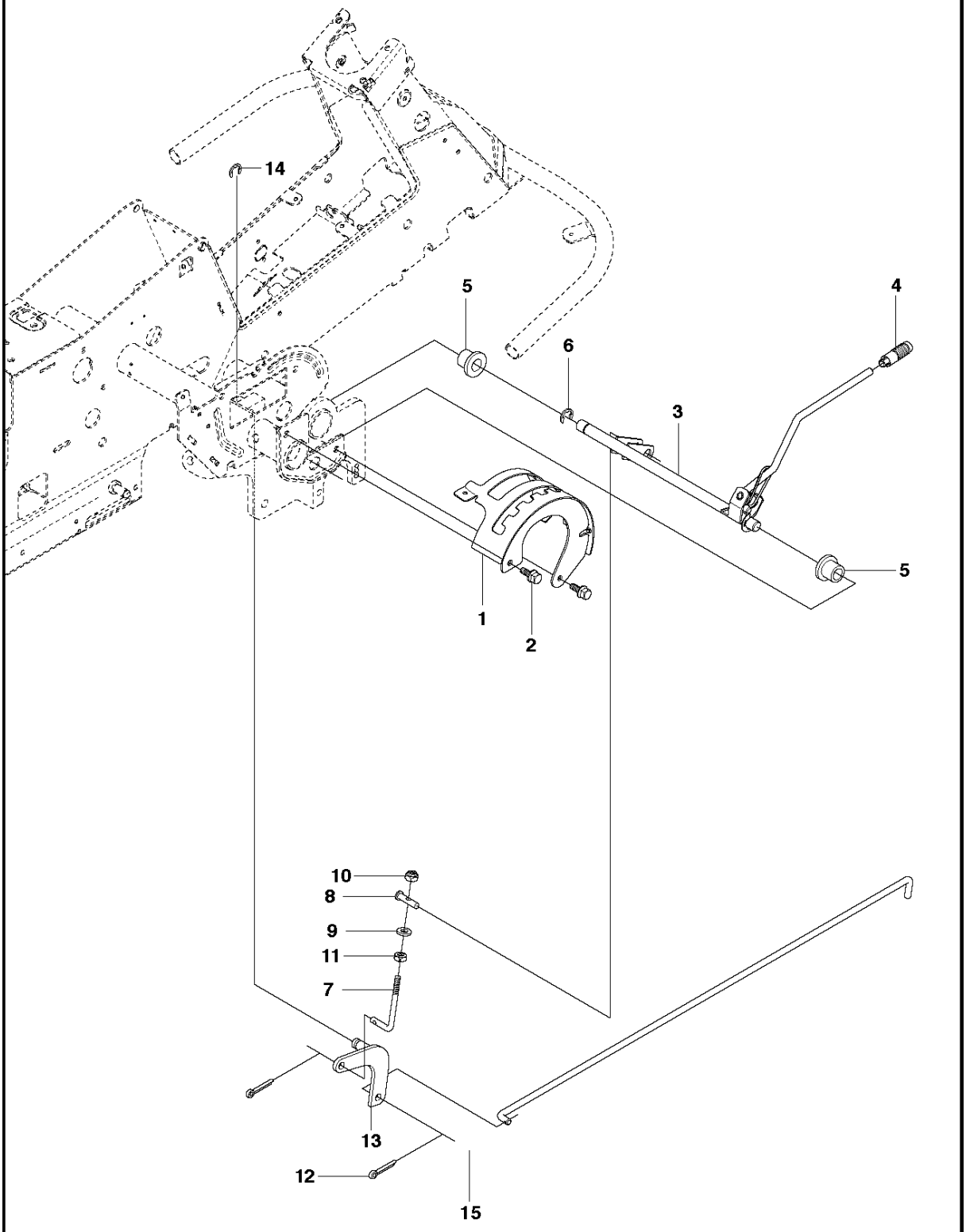

Ref	Part No	Description	Remark	QTY KIT
1	535 50 14-02	CONTROL PLATE		1
2	506 57 01-03	SCREW EHHFM		2
3	504 73 45-01	ADJUSTER		1
4	506 54 20-02	HANDLE		1
5	506 55 43-01	BEARING		2
6	735 31 22-20	E-CLIP		1
7	506 90 82-01	HEIGHT ROD		1
8	506 78 46-01	PEN		1
9	734 11 72-01	WASHER		1
10	732 21 18-01	LOCK NUT		1
11	731 23 18-01	HEXAGON NUT		1
12	721 61 83-01	SPLIT PIN		2
13	578 04 07-01	LINK		1
14	735 31 22-20	E-CLIP		1
15	523 11 45-01	CONNECTION ROD		1

HYDROSTAT K46 EU

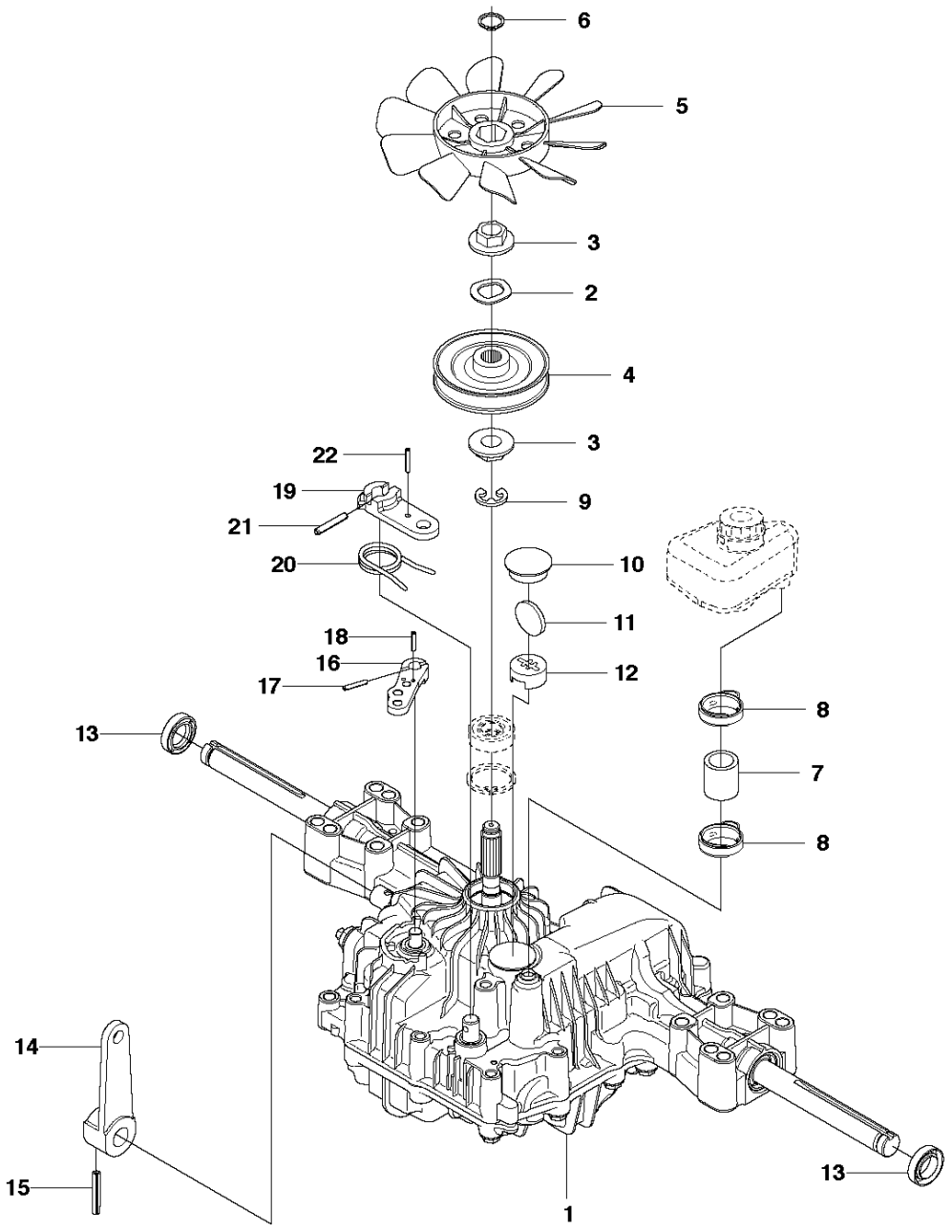

Ref	Part No	Description	Remark	QTY	KIT
1	506 98 63-01	TRANSMISSION		1	
2	506 98 65-01	SPRING WASHER		1	
3	506 98 66-01	DISTANCE		2	
4	502 45 19-01	PULLEY		1	
5	506 98 68-01	FAN		1	
6	735 31 15-00	CIRCLIP		1	
7	502 45 16-01	TUBE		1	
8	506 98 70-01	HOSE CLAMP		2	
9	535 40 28-07	CLIP		1	1
10	535 40 28-32	PLUG		1	1
11	535 40 28-29	MAGNET		1	1
12	502 45 20-01	MAGNET HOLDER		1	1
13	535 40 28-37	SEALING		2	1
14	502 45 32-01	CONTROL LEVER		1	1
15	535 40 28-09	PIN RETAINING SCREW		1	1
16	535 40 28-17	LEVER		1	1
17	535 40 28-16	PIN RETAINING SCREW		1	1
18	535 40 28-33	PIN RETAINING SCREW		1	1
19	535 40 28-38	LEVER		1	1
20	535 40 28-39	RETURN SPRING		1	1
21	535 40 28-40	PIN RETAINING SCREW		1	1
22	535 40 28-41	PIN RETAINING SCREW		1	1

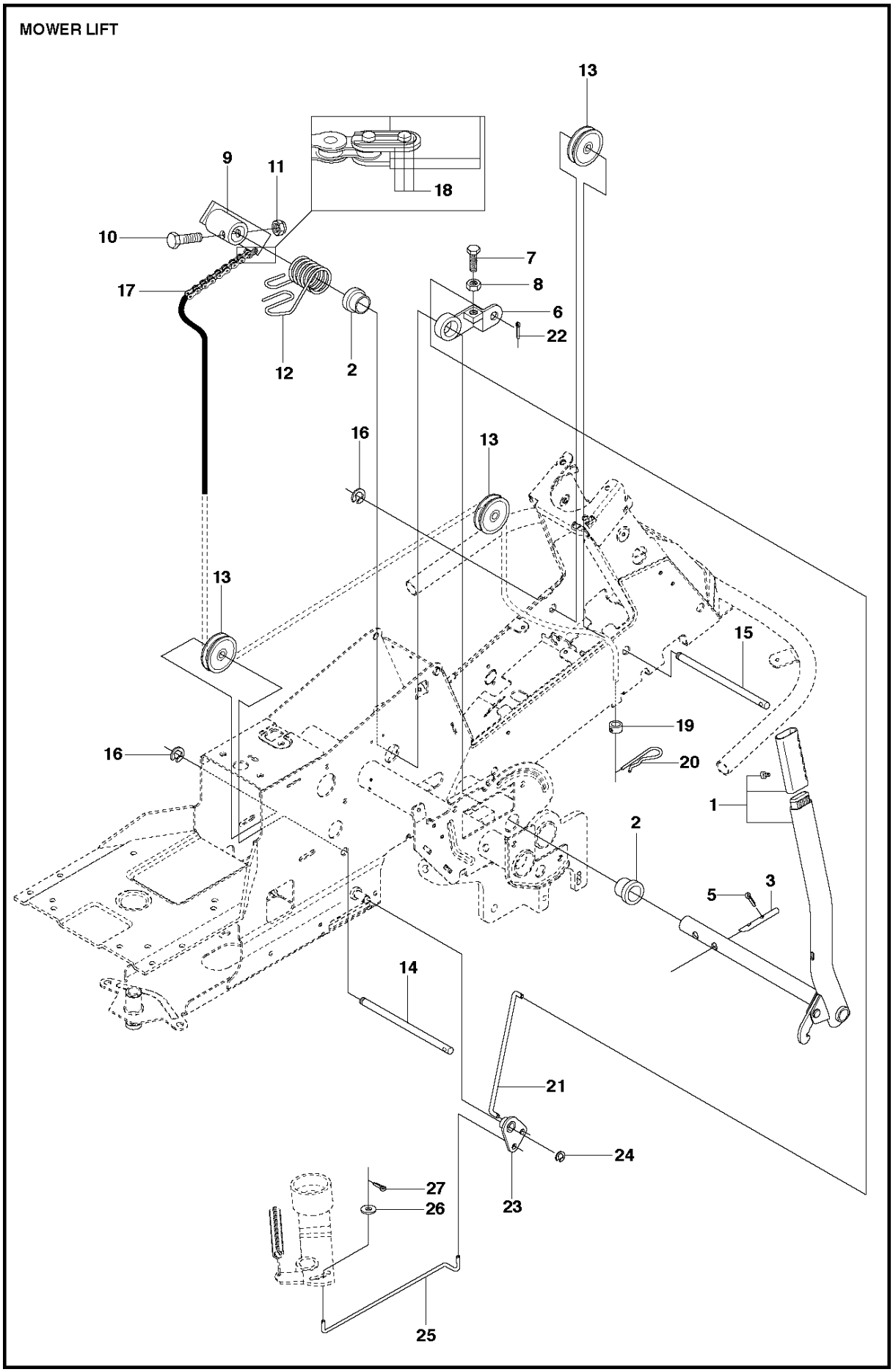
MOWER LIFT
13
9
11
18
10
7
8
17
6
22
12
2
16
13
13
15
19
16
20
1
2
3
5
14
21
24
27
26
23
25

Ref	Part No	Description	Remark	QTY KIT
1	501 01 86-02	LIFTING LEVER ASSY		1
2	506 55 65-01	BEARING		2
3	525 40 66-01	PEN		1
5	721 61 83-01	SPLIT PIN		1
6	506 78 43-01	LINK ASSY		1
7	725 24 97-51	SCREW		1
8	731 23 20-51	HEXAGON NUT		1
9	544 43 36-01	LIFTING ARM		1
10	725 25 42-51	SCREW EHHM		1
11	732 25 22-01	HEXAGON LOCKING NUT		1
12	506 91 68-01	SPRING		1
13	506 90 56-01	OFFSET PULLEY		2
14	506 90 57-01	SHAFT		1
15	506 90 57-02	SHAFT		1
16	735 31 18-20	E-CLIP		2
17	506 55 46-07	CHAIN		1
18	506 55 47-01	LINKAGE		1
19	544 93 42-01	CHAIN STOP		1
20	506 96 66-01	HAIR PIN COTTER		1
21	544 45 69-01	CONNECTION ROD		1
22	721 61 83-01	SPLIT PIN		1
23	544 37 86-01	LINK		1
24	735 31 14-20	E-CLIP		1
25	544 44 88-01	CONNECTION ROD		1
26	734 11 64-41	WASHER		1
27	721 61 83-01	SPLIT PIN		1

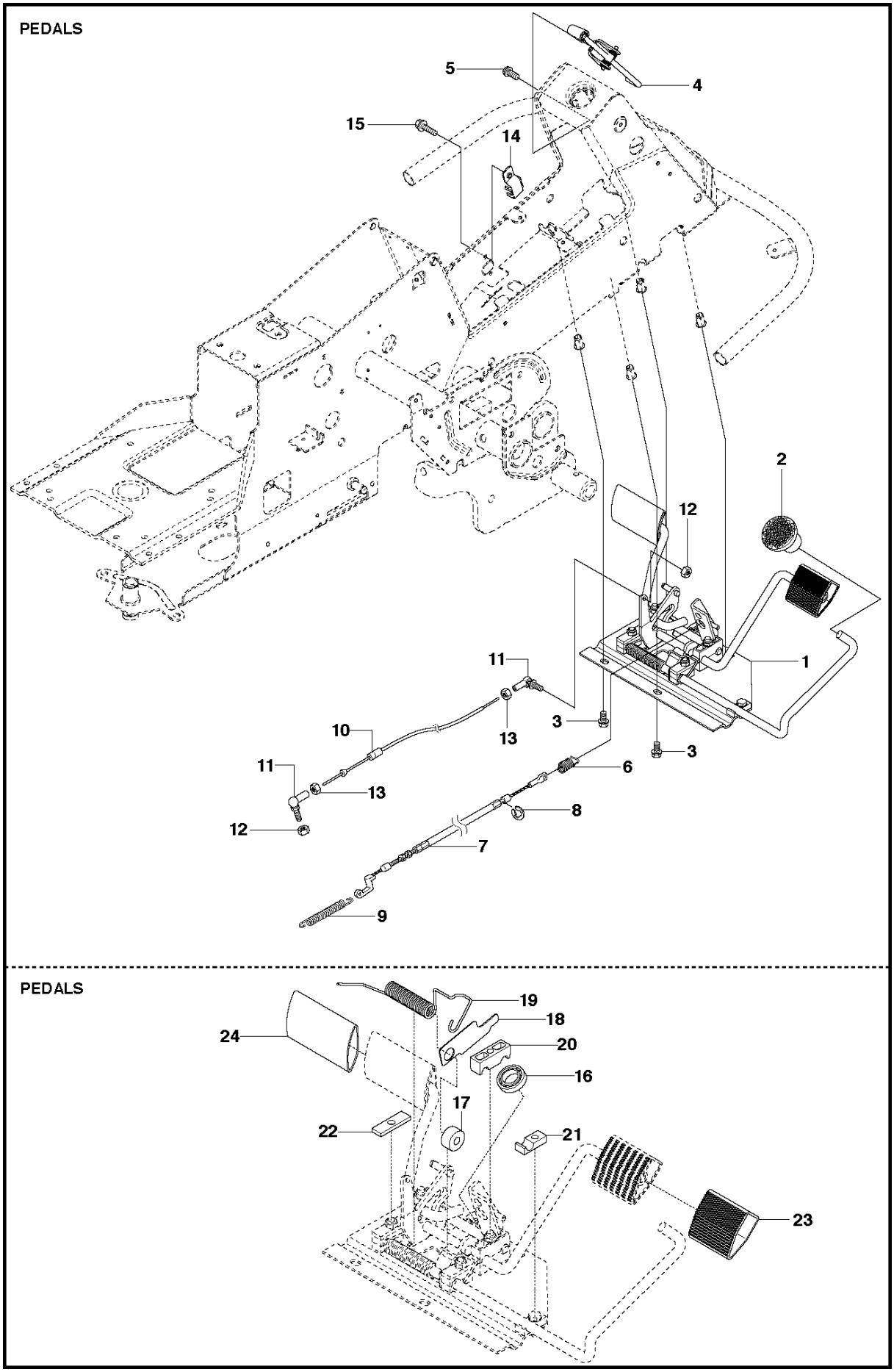
PEDALS
5
4
15
14
2
12
1
11
3
13
10
3
11
6
13
8
12
7
9
PEDALS
19
18
24
20
16
17
22
21
23

Ref	Part No	Description	Remark	QTY	KIT
1	544 12 60-01	PEDAL PLATE ASSY		1	
2	535 47 37-01	KNOB		1	
3	506 57 01-04	SCREW EHHFM		4	
4	544 40 31-01	BRAKE LEVER ASSY		1	
5	725 23 64-61	SCREW EHHFT		2	
6	506 94 63-01	BRAKE SPRING		1	
7	506 99 27-01	BROMSWIRE KPL.		1	
8	735 31 09-20	HARNESS		1	
9	506 53 56-03	DRAW SPRING		1	
10	574 41 11-01	CONTROL CABLE		1	
11	506 55 73-01	VINKELL.AS8 DIN71802		2	
12	732 21 14-01	LOCK NUT		2	
13	731 23 14-01	HEXAGON NUT		2	
14	522 43 08-01	BRACKET		1	
15	725 23 64-61	SCREW EHHFT		1	
16	738 21 02-04	BALL BEARING		1	1
17	535 48 02-01	ROLLER		1	1
18	535 48 06-01	PROTECTIVE PLATE		1	1
19	535 48 07-01	SPRING		1	1
20	535 48 08-01	BEARING SUPPORT		4	1
21	535 48 09-01	BEARING SUPPORT		1	1
22	535 48 10-01	REINFORCEMENT PLATE		1	1
23	535 47 88-01	PEDAL RUBBER		1	1
24	535 47 88-02	PEDAL RUBBER		1	1
25	506 56 65-01	CLIP		1	
26	725 23 64-61	SCREW EHHFT		1	

SEAT, TS2500

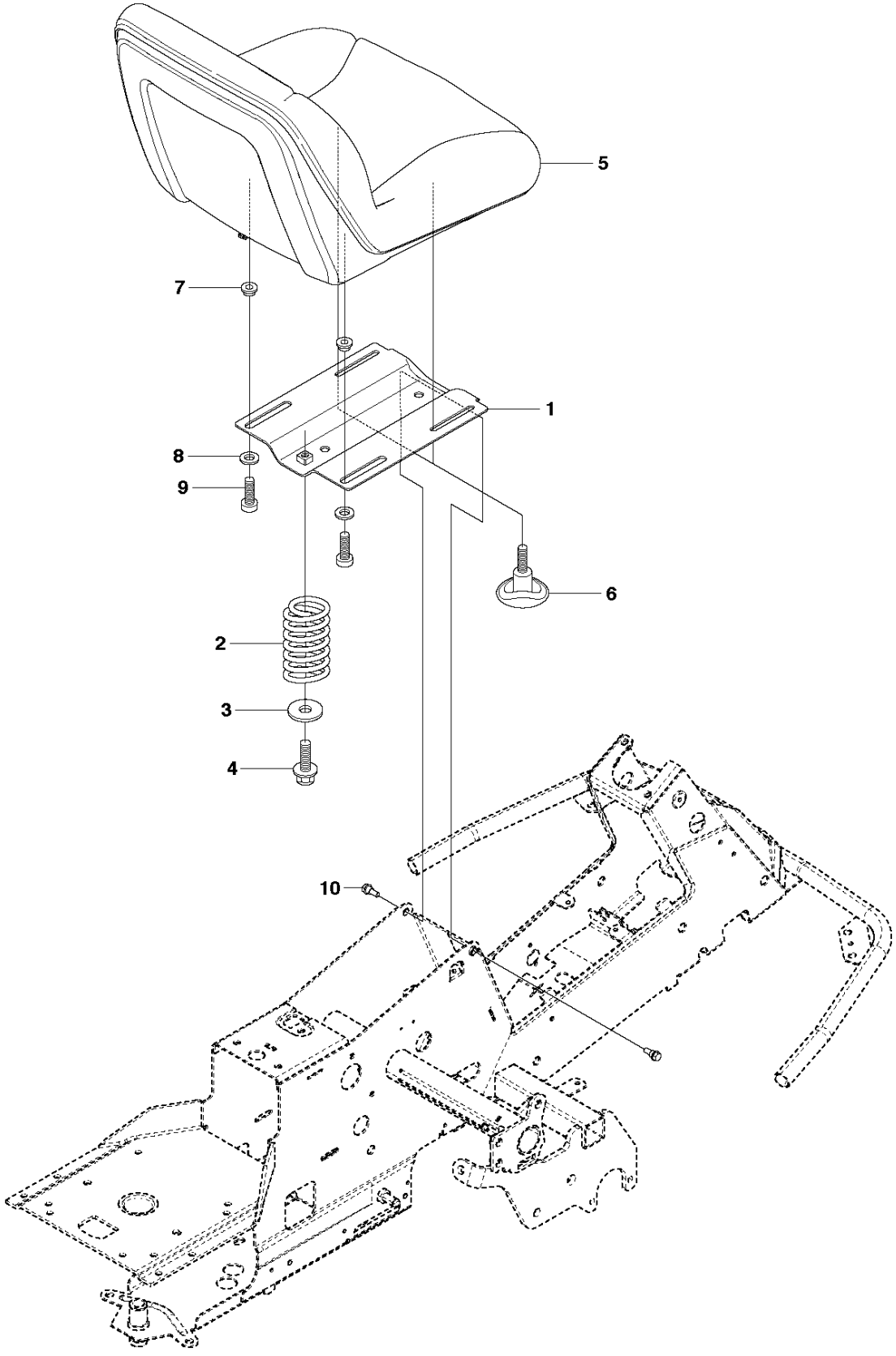

Ref	Part No	Description	Remark	QTY KIT
1	573 99 50-04	SEAT BRACKET		1
2	506 91 53-01	COMPRESSION SPRING		1
3	734 11 74-41	WASHER		1
4	725 24 93-71	SCREW EHHM		1
5	502 60 97-01	SEAT		1
6	506 56 55-01	JUSTERVRED		2
7	506 56 53-01	BUSHING		2
8	734 11 64-41	WASHER		2
9	506 55 63-01	SCREW UNC		2
10	506 59 74-01	SCREW		2

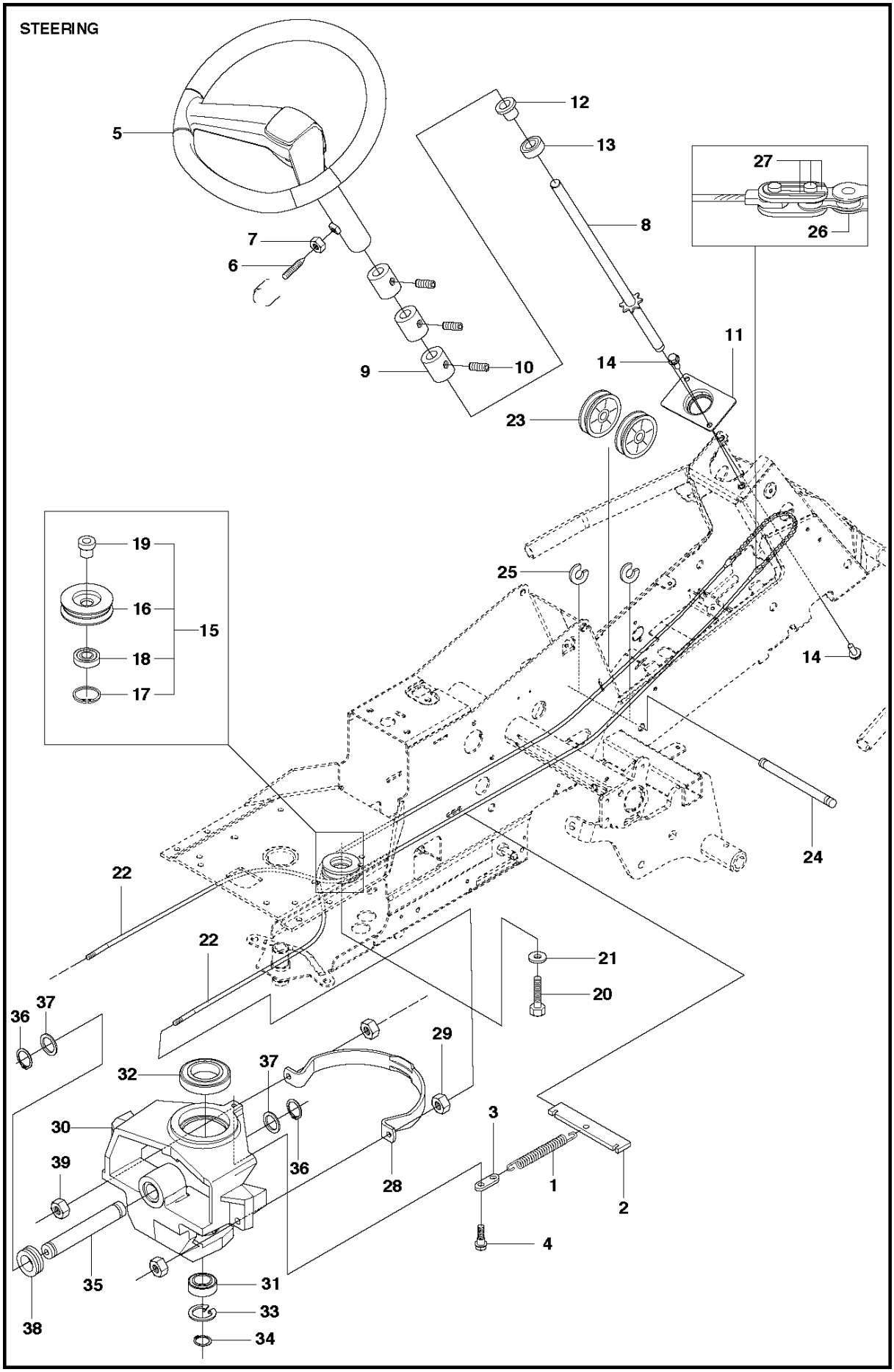
STEERING
5
12
13
27
26
8
7
6
9
10
14
11
23
19
16
15
18
17
25
14
24
22
22
21
20
36
37
29
32
37
30
39
36
28
3
1
2
4
35
31
33
38
34

Ref	Part No	Description	Remark	QTY	KIT
1	506 67 19-01	SPRING		1	
2	506 57 63-01	SPRING RETAINER		1	
3	506 67 08-01	LINK		1	
4	506 59 74-01	SCREW		1	
5	544 37 52-03	STEERING WHEEL		1	
6	728 74 55-05	SCREW IHSETM		1	
7	731 23 18-01	HEXAGON NUT		1	
8	535 49 95-01	ROD STEERING ASSY		1	
9	506 86 34-01	DRIVER		3	
10	728 84 43-05	SCREW IHSETM		3	
11	578 06 52-01	BRACKET		1	
12	506 88 78-01	SPACER		1	
13	738 21 04-04	BALL BEARING		1	
14	506 57 01-04	SCREW EHHFM		3	
15	506 50 09-03	BARRING WHEEL		1	
16	535 42 41-01	BARRING WHEEL		1	15
17	735 31 40-10	CIRCLIP		1	15
18	738 22 04-19	BALL BEARING		1	15
19	506 50 08-02	BUSHING		1	15
20	506 67 54-03	SCREW EHHFM		1	
21	734 11 74-41	WASHER		1	
22	506 58 91-04	WIRE ASSY		2	
23	506 52 24-01	STARTER PULLEY		2	
24	506 53 94-03	SHAFT		1	
25	735 31 14-20	E-CLIP		2	
26	506 55 46-01	CHAIN		1	
27	506 55 47-01	LINKAGE		2	
28	544 42 73-01	WIRE GUIDE		1	
29	731 23 20-51	HEXAGON NUT		2	
30	577 65 93-02	SPINDLE		1	
31	738 21 05-04	BALL BEARING		1	
32	738 21 10-04	BALL BEARING		1	
33	735 31 40-10	CIRCLIP		1	
34	735 31 26-00	CIRCLIP		1	
35	506 98 59-01	SWING AXLE		1	
36	735 31 26-00	CIRCLIP		2	
37	506 77 34-01	WASHER		2	
38	740 68 14-21	V-RING		1	
39	732 21 20-51	NUT		2	

TRANSMISSION

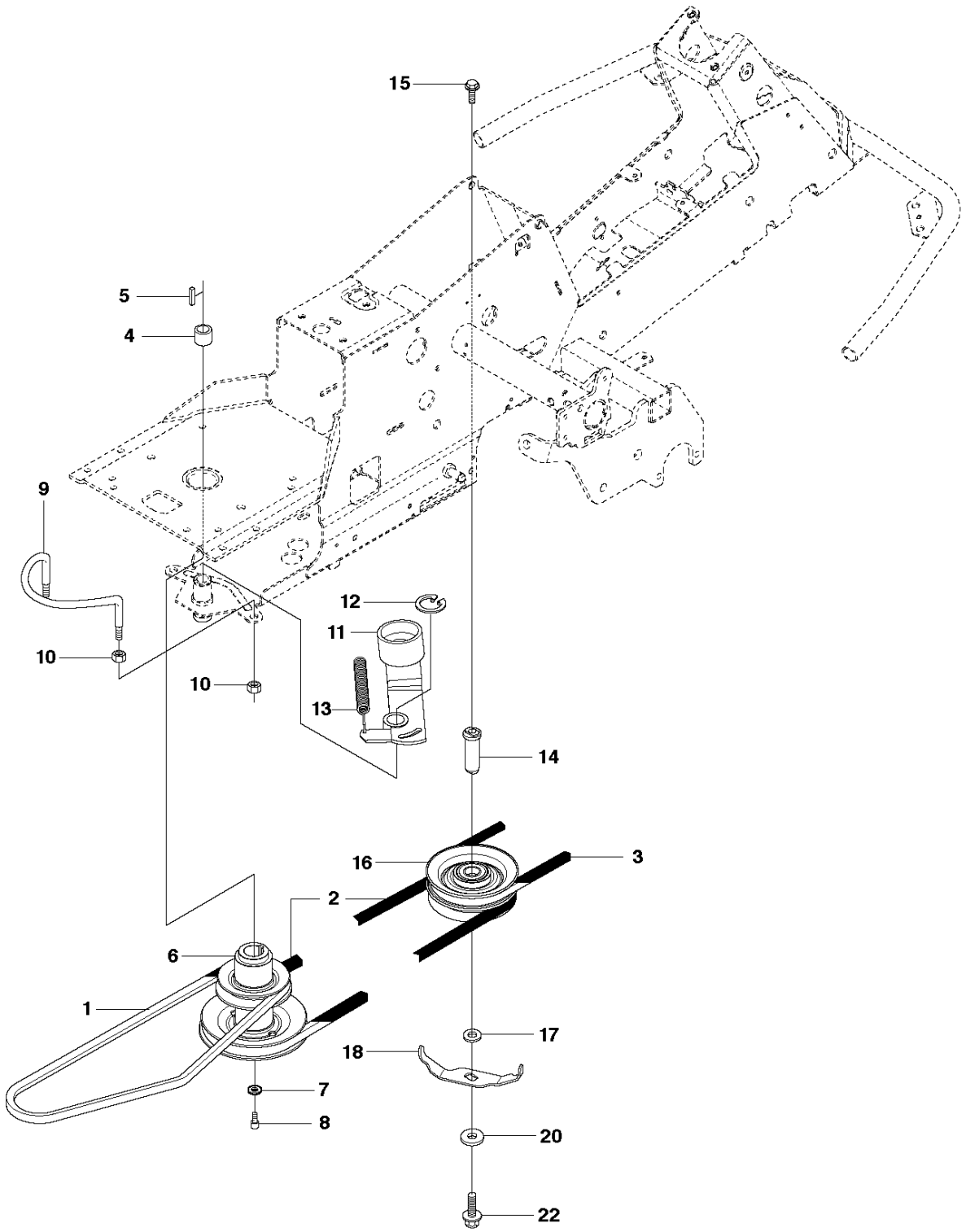

Ref	Part No	Description	Remark	QTY KIT
1	522 93 03-01	BELT		1
2	544 40 02-01	BELT		1
3	535 41 19-01	BELT		1
4	506 50 92-01	SPACING SLEEVE		1
5	506 55 59-01	WEDGE		1
6	535 48 24-01	PULLEY		1
7	506 59 75-01	WASHER		1
8	506 55 60-02	SCREW UNC		1
9	506 66 45-01	BELT GUIDE		1
10	731 23 20-51	HEXAGON NUT		4
11	535 48 44-01	BELT TENSIONER ASSY		1
12	735 31 26-00	CIRCLIP		1
13	506 66 56-01	SPRING		1
14	544 42 61-01	SHAFT		1
15	506 67 54-02	SCREW EHHFM		1
16	535 48 22-01	MELLANHJUL		1
17	506 77 57-01	WASHER		1
18	544 40 53-01	BELT GUIDE		1
20	506 59 75-01	WASHER		1
22	506 57 01-05	SCREW EHHFM		1

WHEELS & TIRES

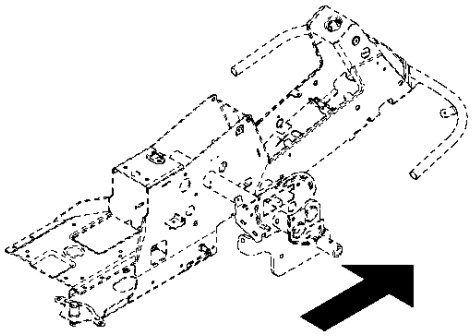

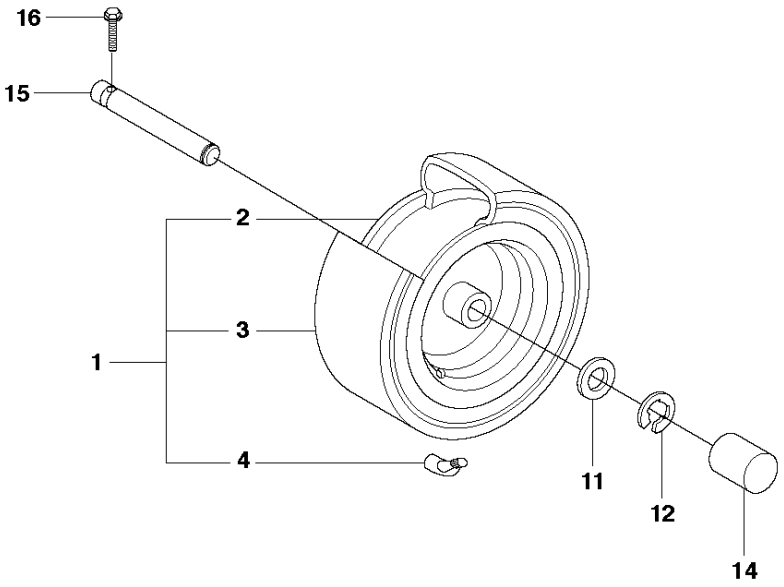

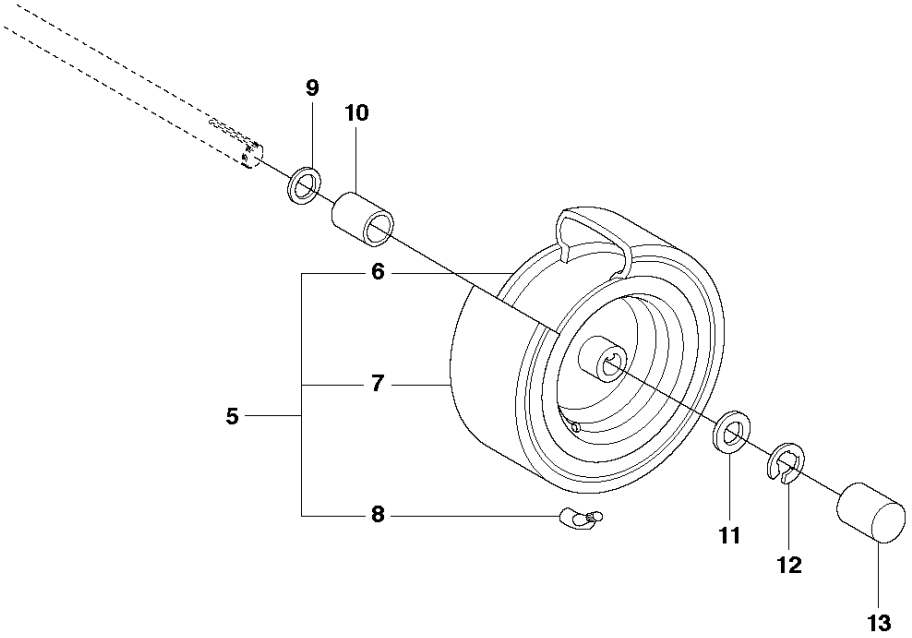

Ref	Part No	Description	Remark	QTY	KIT
1	523 01 22-01	WHEEL		2	
2	523 03 45-01	RIM		1	1
3	523 03 46-01	TYRE		1	1
4	523 03 47-01	VALVE		1	1
5	523 01 26-01	WHEEL		2	
6	523 03 48-01	RIM		1	5
7	523 03 46-01	TYRE		1	5
8	523 03 47-01	VALVE		1	5
9	506 50 48-03	WASHER		2	
10	506 59 62-03	SPACING SLEEVE		2	
11	506 50 48-05	WASHER		4	
12	506 89 90-01	E-CLIP		4	
13	506 92 30-01	RUND FOT UKB 30 S		2	
14	506 95 58-01	CUP		2	
15	535 47 08-01	WHEEL AXLE		2	
16	725 24 59-61	SCREW EHHFT		2	