ILLUSTRATED PARTS LIST

MFG. ID NO. 96041032101
CUSTOMER CATALOG NO. LT2320 A2
PRODUCT NO. 960 41 03-21

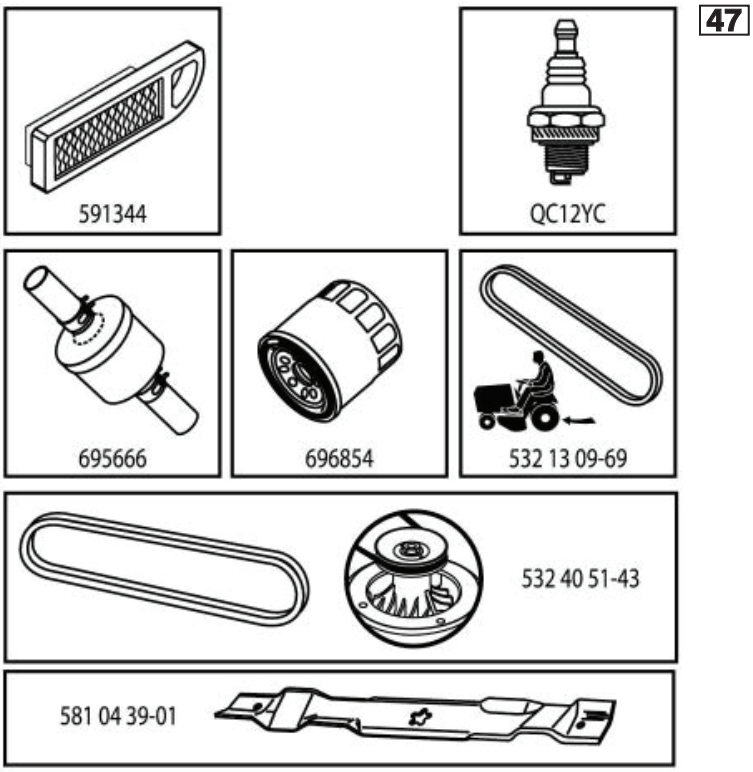

TRACTOR - - MODEL NO. LT2320 A2 (96041032101), PRODUCT NO. 960 41 03-21

DECALS 27

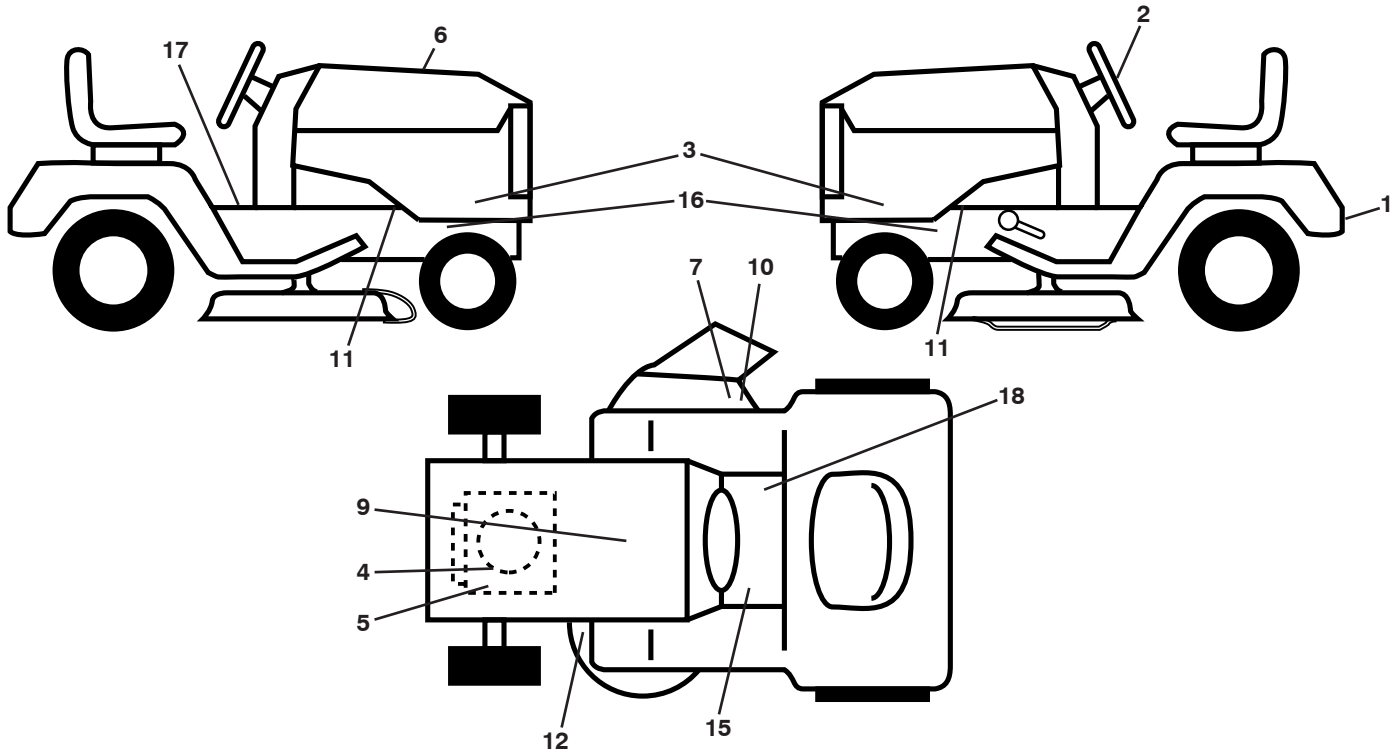

KEY NO.	PART NO.	DESCRIPTION
1	532 43 74-43	Decal, Fender
2	532 43 74-45	Decal, STRWHL
3	581 67 36-01	Decal, Panel SD
4	581 57 97-01	Decal, Eng.
5	581 59 40-01	Decal, Eng.
6	581 60 18-01	Decal, Replacement
7	584 90 46-01	Decal, Deflect. Warning
9	532 14 50-05	Decal, Battery Dnge/Poi
10	581 57 92-01	Decal, Defl.
11	581 57 96-01	Decal, Warning
12	581 58 00-01	Decal, V-Belt Sch
15	581 72 40-01	Decal, Brake/Clutch
16	581 57 98-01	Decal, Chassis Warning
17	581 57 81-01	Decal, Read Owner's Manual
18	581 57 80-01	Decal, Parking Brake
- -	581 72 46-01	Decal, Drawbar
- -	581 72 48-01	Decal, Bypass
- -	532 41 19-03	Pad, Footrest, LH
- -	532 41 22-79	Pad, Footrest, RH
- -	585 53 02-40	Manual, Operators (Euro)
- -	585 53 02-50	Manual, Operators (Scan)
- -	585 53 02-20	Manual, Operators (E-Bloc)
- -	585 53 02-30	Manual, Operators (Baltic)

WHEELS AND TIRES

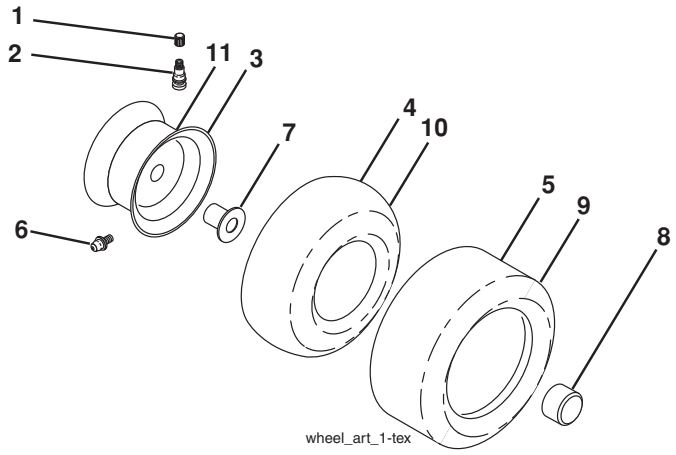

KEY NO.	PART NO.	DESCRIPTION
1	532 05 91-92	Cap Valve Tire
2	532 06 51-39	Stem Valve
3	532 13 83-36	Rim Front Service
4	532 05 99-04	Tube Front (Service Item Only)
5	532 10 62-22	Tire TM Front 15 x 6-6
6	532 12 49-57	Fitting Grease (Front Wheel Only)
7	532 12 49-59	Bearing Flange (Front Wheel Only)
8	532 17 50-39	Cap Axle Blk 1 50 x 1 00
9	532 12 20-82	Tire TM Rear 20 x 10-8
10	532 12 49-26	Tube Rear (Service Item Only)
11	532 13 83-37	Rim Asm 8" rear Service
- -	532 14 43-34	Sealant, Tire (10 oz. Tube)

NOTE: All component dimensions given in U.S. inches
1 inch = 25.4 mm

TRACTOR - - MODEL NO. LT2320 A2 (96041032101), PRODUCT NO. 960 41 03-21

SCHEMATIC 38

SCH13

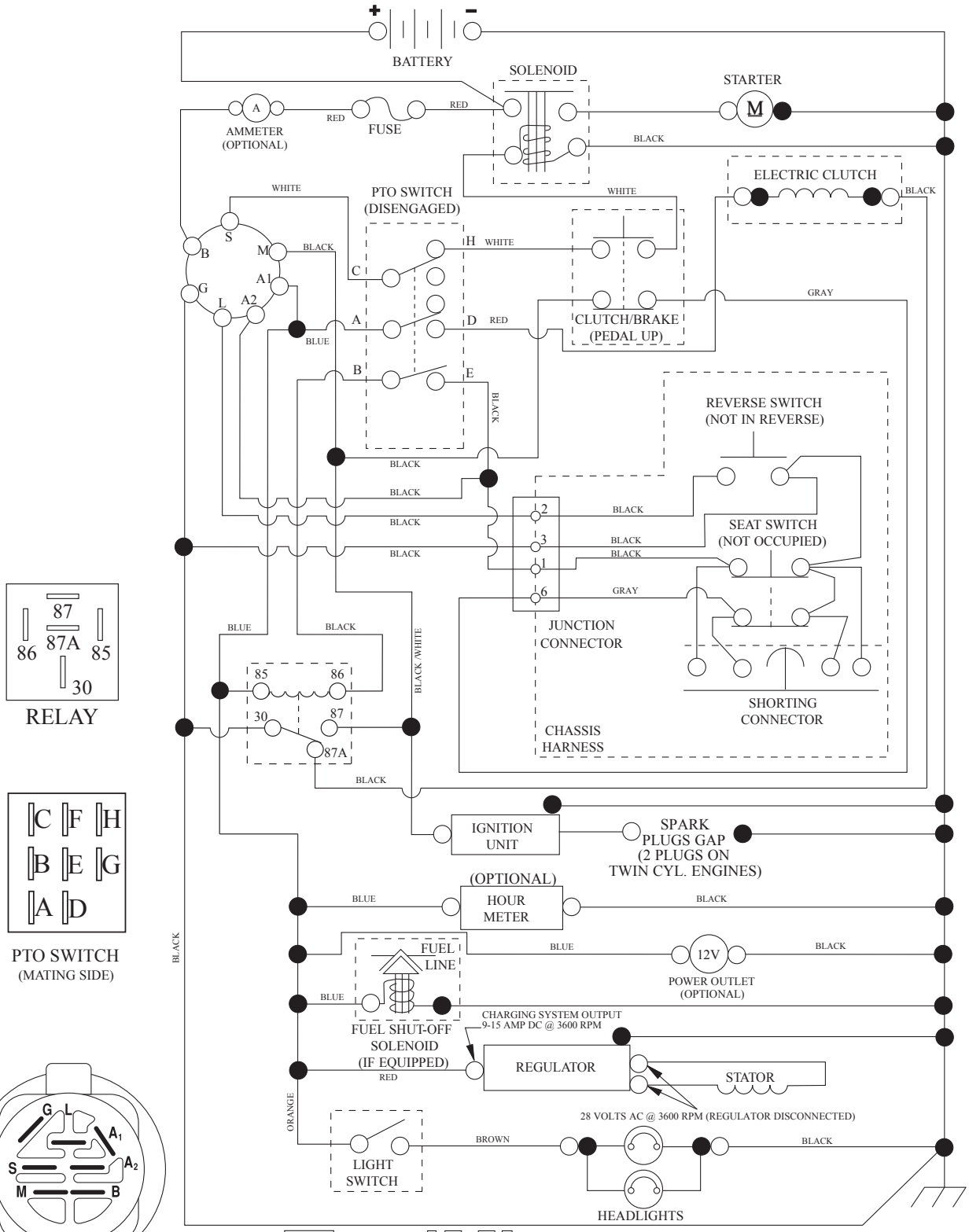

POSITION	CIRCUIT	"MAKE"
OFF	M+G+A1	
RUN/OVERRIDE	B+A1	
RUN	B+A1	L+A2
START	B + S + A1	

TRACTOR - - MODEL NO. LT2320 A2 (96041032101), PRODUCT NO. 960 41 03-21

ELECTRICAL 32

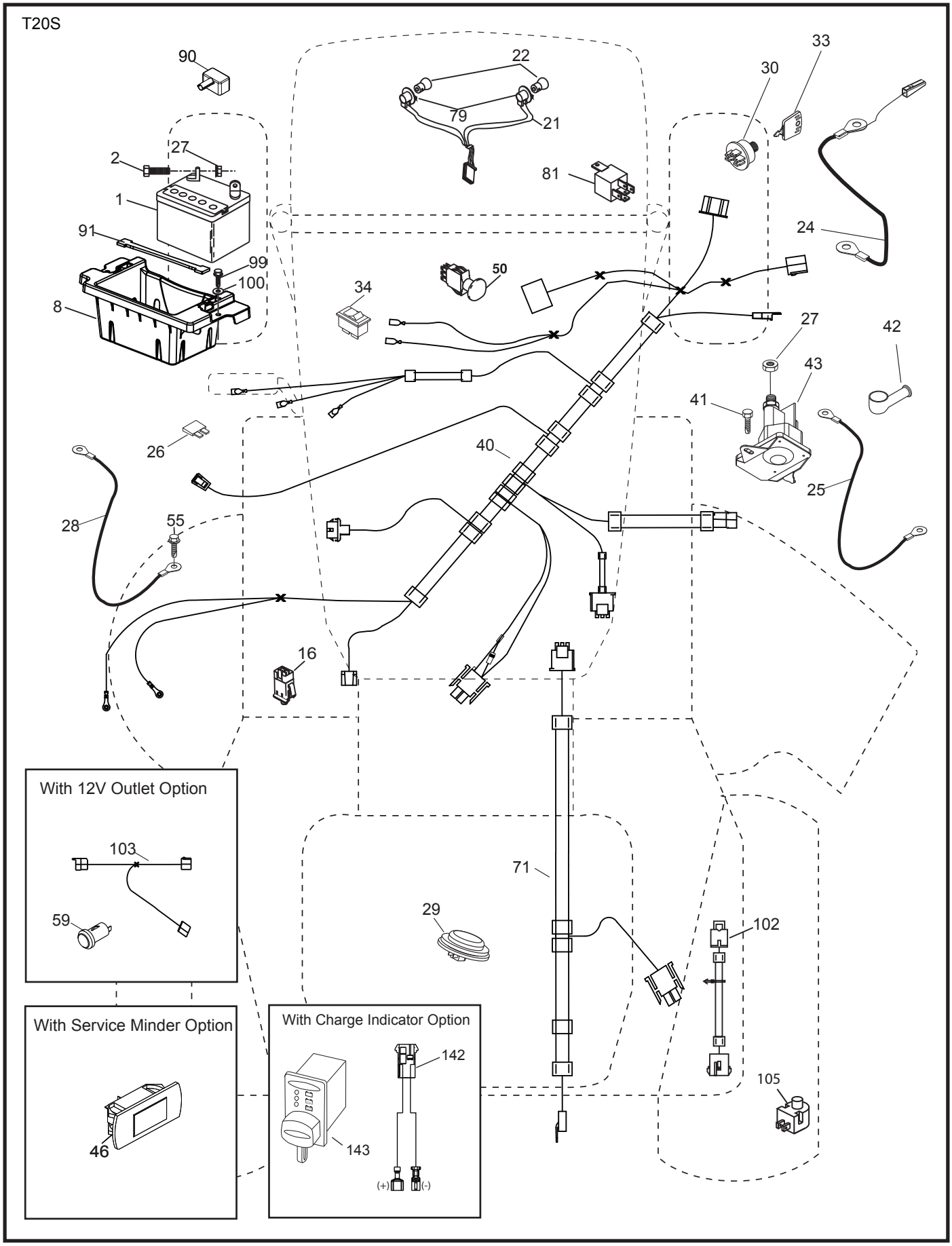

KEY NO.	PART NO.	DESCRIPTION
1	532 16 34-65	Battery
2	874 76 04-12	Bolt Hex Head 1/4-20 x 3/4
8	532 18 64-91	Box Battery
16	532 17 61-38	Switch Interlock Push-In
21	532 40 02-52	Harness Socket Light w/4152J
22	532 00 41-52	Bulb Light
24	585 55 56-01	Cable Battery
25	585 55 55-01	Cable Starter
26	532 17 51-58	Fuse
27	873 51 04-00	Nut Keps Hex 1/4-20 unc
28	532 41 65-88	Cable, Ground
29	532 40 15-45	Switch, Seat
30	532 19 33-50	Switch, Ign
33	532 41 19-35	Key\Chain
34	532 11 07-12	Switch Light / Reset
40	532 40 96-14	Harness Ign. Dash
41	817 72 04-08	Screw Thd Cut 1/4-20 x 1/2
42	532 13 15-63	Cover, Terminal
43	532 19 25-07	Solenoid
46	586 16 18-01	Gauge Servicereminder Hrmtr
50	532 17 46-51	Switch PTO
55	817 06 05-12	Screw Thdrol 5/16-18 x 3/4 TYTT
71	532 19 42-76	Harness Ign. Chassis
79	532 17 52-42	Socket Asm Bulb Twistlock
81	532 40 96-15	Relay Harness
90	532 43 53-95	Cover Terminal
91	532 19 02-70	Strap Battery Mount
99	817 67 04-12	Screw Hexwsh Thdrol 1/4-20 x 3/4
100	819 09 14-16	Washer 9/32 x 7/8 x 16 Ga.
102	532 40 44-54	Harness Pigtail
105	532 40 75-68	Switch Reverse TT Pedal Control

NOTE: All component dimensions given in U.S. inches
1 inch = 25.4 mm

TRACTOR - - MODEL NO. LT2320 A2 (96041032101), PRODUCT NO. 960 41 03-21

CHASSIS AND ENCLOSURES 39

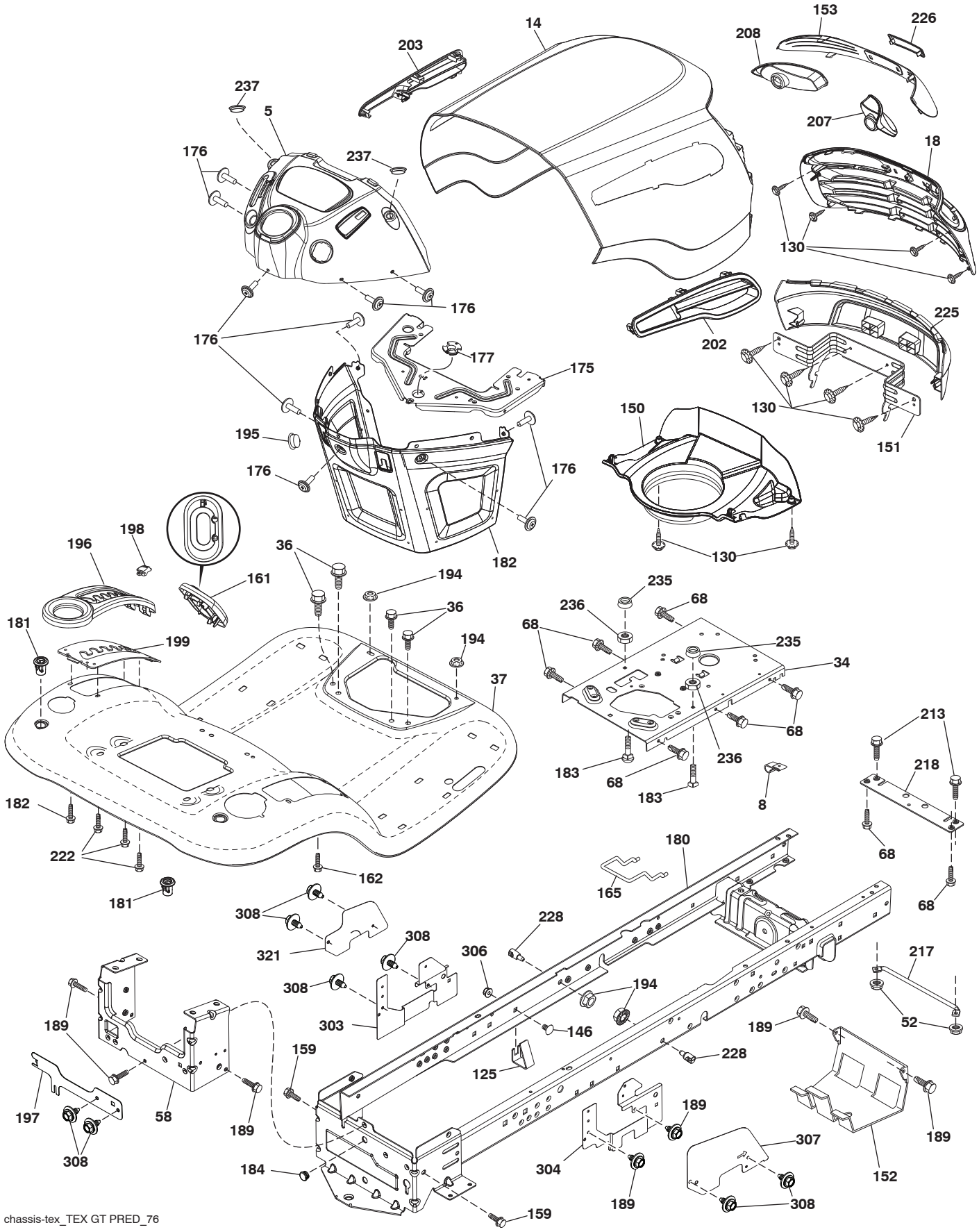

CHASSIS AND ENCLOSURES 39

KEY NO.	PART NO.	DESCRIPTION
5	532 42 82-71	Dash
8	532 12 64-71	Clip, Insulator
14	532 44 38-24	Hood
18	532 42 73-33	Grille/Lens Asm.
34	580 91 08-01	Plate Engine
36	817 06 05-12	Screw 5/16-18 x 3/4
37	532 44 38-16	Fender
52	873 68 05-00	Nut Lock 5/16-18
58	532 41 22-81	Drawbar Upper
68	817 49 05-08	Screw Thdrol 5/16-18 x 1/2
125	581 68 48-01	Clip Fuel Line
130	532 41 63-58	Screw 10 x .750 BOS Thread
146	581 85 79-01	Bolt
150	584 86 29-01	Air Duct
151	532 44 54-94	Bracket Pivot Hood
152	532 19 95-35	Shield Browning
153	532 42 47-17	Lens Bar
159	817 00 06-12	Screw 3/8-16 x 3/4
161	532 41 18-79	Window, Fuel
162	532 14 24-32	Screw Hex Wsh 1/4 x 1/2 unc
165	532 19 68-26	Support Tank Rear
175	532 19 63-04	Crossmember
176	532 40 07-76	Screw 10-24 x 5/8
177	532 19 52-27	Bushing Steering
180	532 41 50-64	Chassis
181	532 40 47-96	Bushing
182	532 40 68-59	Dash Lower
183	874 52 05-20	Bolt 5/16-18 x 1-1/4 Full Thd.
184	587 55 41-01	Plug Demo
189	817 00 05-12	Screw 5/16-18 x 3/4
194	873 90 05-00	Nut Lock Hex Flange 5/16-18
195	532 40 41-37	Plug Hole
196	532 41 18-78	Console Asm Decklift
197	587 49 32-02	Shield Drawbar
198	532 44 15-52	Indicator
199	532 19 63-77	Plate Deck Lift
202	532 44 54-26	Vent Side Hood RH
203	532 44 55-83	Vent Side Hood LH
207	532 19 89-63	Bezel RH
208	532 19 89-64	Bezel LH
213	874 76 05-12	Bolt 5/16-18 x 3/4
217	532 40 91-67	Rod Pivot
218	532 19 63-95	X-Piece Hood Stop
222	532 13 77-29	Screw 1/4-20 x 5/8
225	532 44 38-25	Bumper Grille
226	532 42 47-16	Logo Predator
228	532 19 51-61	Stud Fastner
235	532 40 61-29	Spacer Fender
236	873 93 05-00	Nut Lock 5/16-18 unc
237	532 40 37-04	Plug Mount Cargo
303	587 49 34-01	Shield Chassis LH
304	587 49 29-01	Shield Chassis RH
306	873 90 06-00	Nut Lock 3/8-16 unc
307	587 52 03-01	Shield Upper RH
308	532 17 18-77	Bolt 5/16-18 UNC 3/4
321	587 52 02-01	Shield Upper LH
- -	532 40 09-44	Kit Bumper

NOTE: All component dimensions given in U.S. inches
1 inch = 25.4 mm

TRACTOR - - MODEL NO. LT2320 A2 (96041032101), PRODUCT NO. 960 41 03-21

DRIVE 40

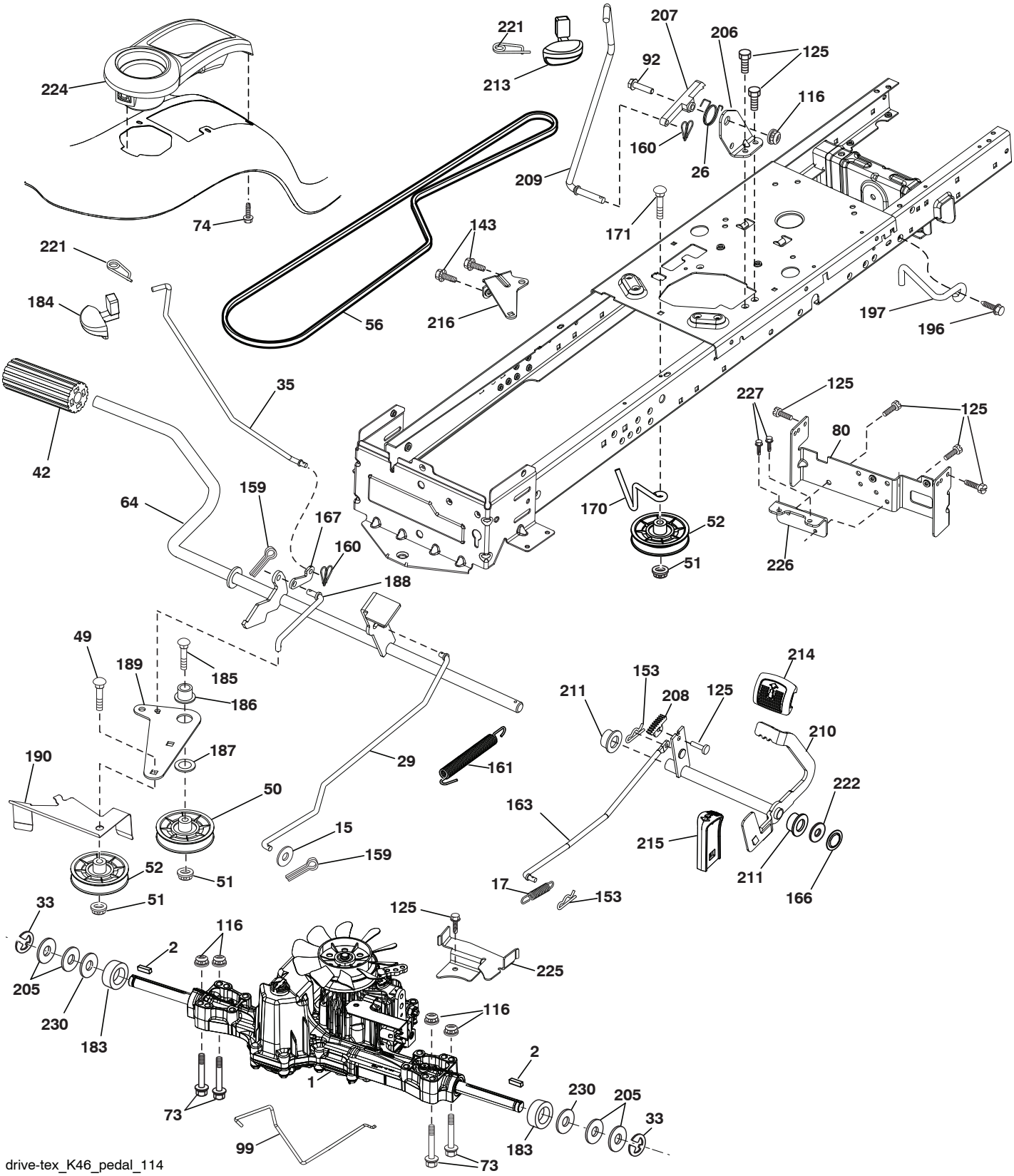

drive-tex_K46_pedal_114

KEY NO.	PART NO.	DESCRIPTION
1	– – – – – –	Transaxle, TUFFTORQ K46BT (426120) (Order parts from transaxle manufacturer.)
2	532 12 35-83	Key
15	819 13 13-16	Washer 13/32 x 13/16 x 16 Ga.
17	532 41 36-78	Spring, Brake
26	532 19 96-79	Spring Return Cruise
29	532 40 38-06	Rod, Brake
33	812 00 00-01	Ring E
35	583 86 45-01	Rod, Brake, Park
42	532 12 48-72	Cover, Foot Pedal
49	872 11 06-14	Bolt
50	532 19 43-27	Pulley Idler Flat
51	873 90 06-00	Lock Nut 3/8-16
52	532 19 43-26	Idler V-Groove
56	532 13 09-69	V-Belt, Drive
64	532 19 78-65	Shaft Asm. Pedal Brake Control
73	874 49 05-40	Bolt Hex Flghd 5/16-18 Gr. 5
74	532 14 24-32	Screw Hex 1/4 x 1/2 unc
80	532 44 06-19	Bracket Strap Torque
92	874 76 05-20	Bolt Fin Hex 5/16-18 unc x 1.25
99	532 41 57-42	Rod Spring Bypass
116	873 90 05-00	Nut Lock Hex Flange 5/16-18
125	817 00 05-12	Screw 5/16-18 x 3/4
143	817 49 05-08	Screw 5/16-18 x 1/2
153	532 12 47-88	Retainer Spring
159	876 02 04-12	Pin Cotter 1/8 x 3/4
160	532 16 94-84	Retainer Clip
161	532 10 57-09	Spring, Return, Clutch
163	532 44 82-75	Rod Pedal Control
166	532 42 91-64	Nut Push
167	532 40 52-57	Latch Brake Parking
170	532 19 43-22	Keeper Belt Centerspan
171	872 11 06-16	Bolt
183	532 13 70-57	Spacer Axle
184	587 65 37-01	Handle Parking Brake
185	872 11 06-22	Bolt Rdhd Sqnk 3/8-16 x 2-3/4 Gr. 5
186	532 19 43-21	Spacer Retainer
187	819 13 32-10	Washer
188	532 19 43-23	Link Clutch Ground Drive
189	532 19 43-17	Bellcrank Ground Drive
190	532 19 43-18	Keeper Bellcrank Ground Drive
196	817 00 06-16	Screw 3/8-16 x 1
197	585 65 86-01	Link Clutch Anti-Rotation
205	532 12 17-48	Washer
206	532 44 85-96	Bracket Mount Latch Cruise
207	532 19 78-68	Latch Control Cruise
208	532 19 78-69	Gear Sector Control Cruise
209	532 19 95-92	Rod Control Cruise
210	532 19 78-60	Rocker Asm. Pedal Control
211	532 12 01-83	Bearing Nylon
213	532 40 31-19	Knob Control Cruise
214	532 42 12-63	Pedal Forward
215	532 40 17-23	Pedal Reverse
216	532 19 61-31	Bracket Pulley Idler
221	532 40 31-87	Retainer Spring Clip Handle
222	879 21 20-10	Washer 21/32 x 1-1/4 x 10 Ga.
224	532 41 22-98	Console Asm
225	532 40 33-19	Keeper Belt Trans.
226	532 40 15-64	Bracket Mount Touque
227	817 49 05-12	Screw Thdrol 5/16-18 x 3/4
230	532 18 89-67	Washer Hardened

NOTE: All component dimensions given in U.S. inches
1 inch = 25.4 mm

ENGINE 24

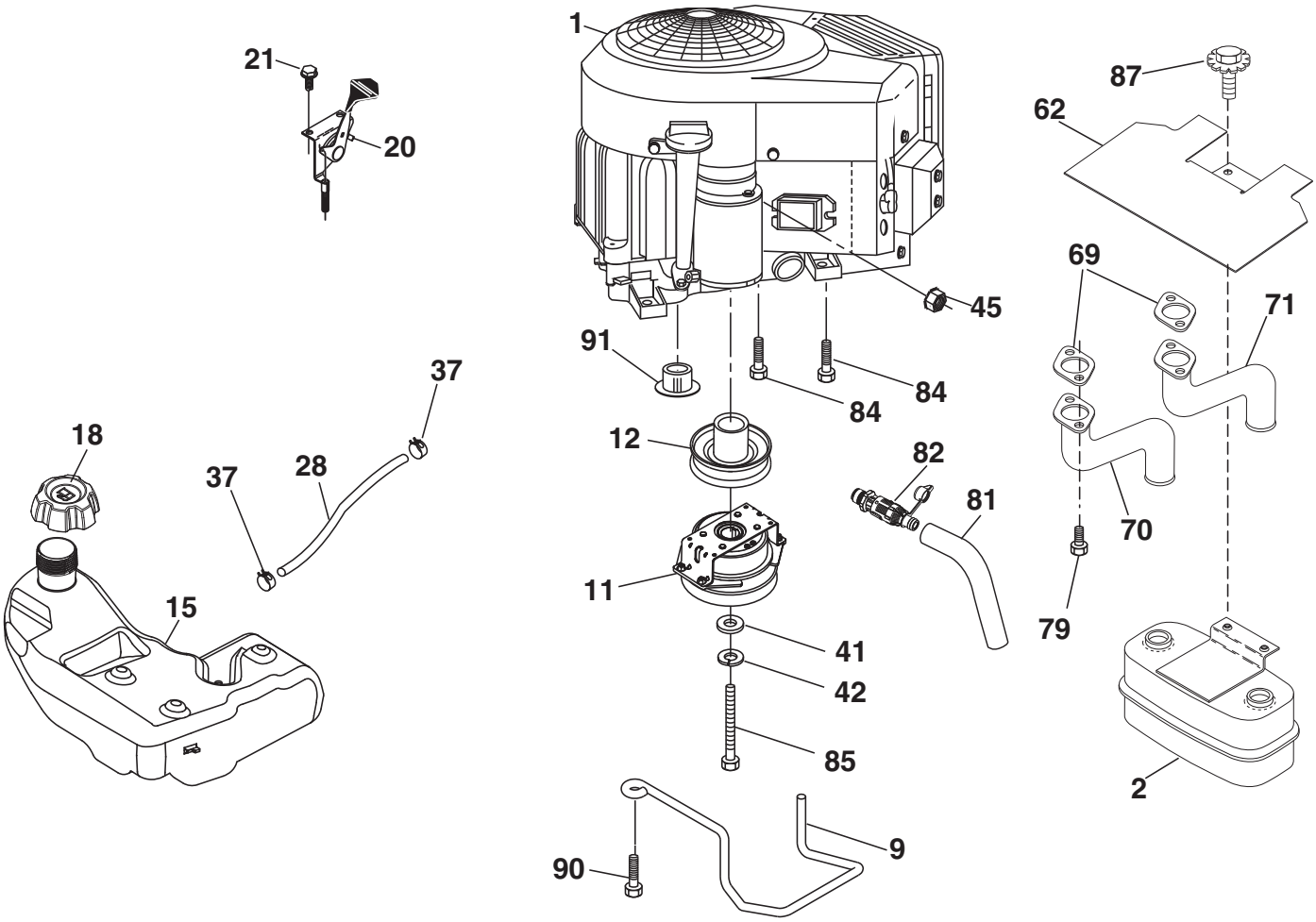

29

SPARK ARRESTER KIT

engine-tex_bs-2cyl_117

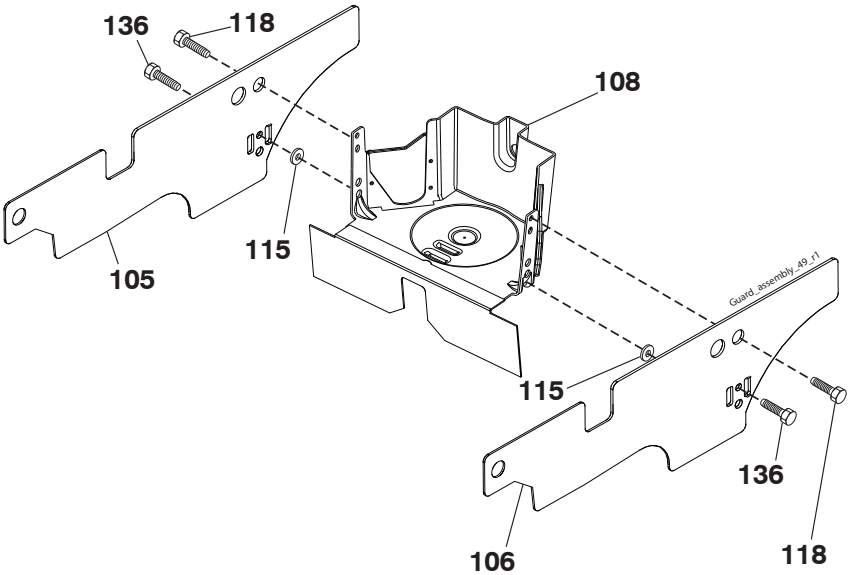

KEY NO.	PART NO.	DESCRIPTION
1	– – – – – –	Engine Briggs Model No. 40R777-0004-B1 (585767101)(Order parts from engine manufacturer.)
2	532 14 97-23	Muffler
9	584 90 80-01	Keeper Belt Engine
11	587 24 16-01	Clutch Electric
12	532 40 50-97	Pulley Engine
15	532 19 34-99	Tank Fuel
18	584 24 87-01	Cap Asm
20	532 42 35-02	Control Throttle
21	532 41 63-58	Screw #10 x 0.750 BOS Thread
28	532 13 70-40	Fuel Line
29	532 13 71-80	Spark Arrester Kit
37	532 12 34-87	Clamp Hose
41	532 12 61-97	Washer 1-1/2 OD x 15/32 ID x .250
42	810 04 07-00	Washer Lock 7/16
45	873 51 04-00	Nut Keps Hex 1/4-20 unc
62	532 43 40-17	Shield Heat Muffler
69	532 16 53-91	Gasket
70	581 88 11-01	Tube Exhaust LH
71	581 88 10-01	Tube Exhaust RH
79	532 18 39-06	Screw Socket Head 5/16-18 x 1
81	532 14 84-56	Tube Drain Oil Easy
82	532 42 82-87	Valve Drain Oil Easy
84	817 06 06-20	Screw 3/8-16 x 1-1/4
85	532 17 99-53	Bolt 7/16-20 x 3.75 Gr.
87	532 17 18-77	Bolt 5/16-18 unc x 3/4 w/Sems
90	817 00 06-16	Screw 3/8-16 x 1
91	532 18 74-95	Bushing
105	532 41 56-06	Shield Side LH
106	532 41 56-11	Shield Side RH
108	532 42 68-03	Cover Asm. Eng
115	532 42 30-62	Palnut 1/4
118	817 67 05-08	Screw 5/16-18 x 1/2
136	532 13 77-29	Screw 1/4-20 x 5/8

NOTE: All component dimensions given in U.S. inches
1 inch = 25.4 mm

Engine Power Rating Information

The gross power rating for individual gas engine models is labeled in accordance with SAE (Society of Automotive Engineers) code J1940 (Small Engine Power & Torque Rating Procedure), and rating performance has been obtained and corrected in accordance with SAE J1995 (Revision 2002-05). Torque values are derived at 3060 RPM; horsepower values are derived at 3600 RPM. Actual gross engine power will be lower and is affected by, among other things, ambient operating conditions and engine-to-engine variability. Given both the wide array of products on which engines are placed and the variety of environmental issues applicable to operating the equipment, the gas engine will not develop the rated gross power when used in a given piece of power equipment (actual “on-site” or net power). This difference is due to a variety of factors including, but not limited to, accessories (air cleaner, exhaust, charging, cooling, carburetor, fuel pump, etc.), application limitations, ambient operating conditions (temperature, humidity, altitude), and engine-to-engine variability. Due to manufacturing and capacity limitations, Briggs & Stratton may substitute an engine of higher rated power for this Series engine.

STEERING ASSEMBLY 41

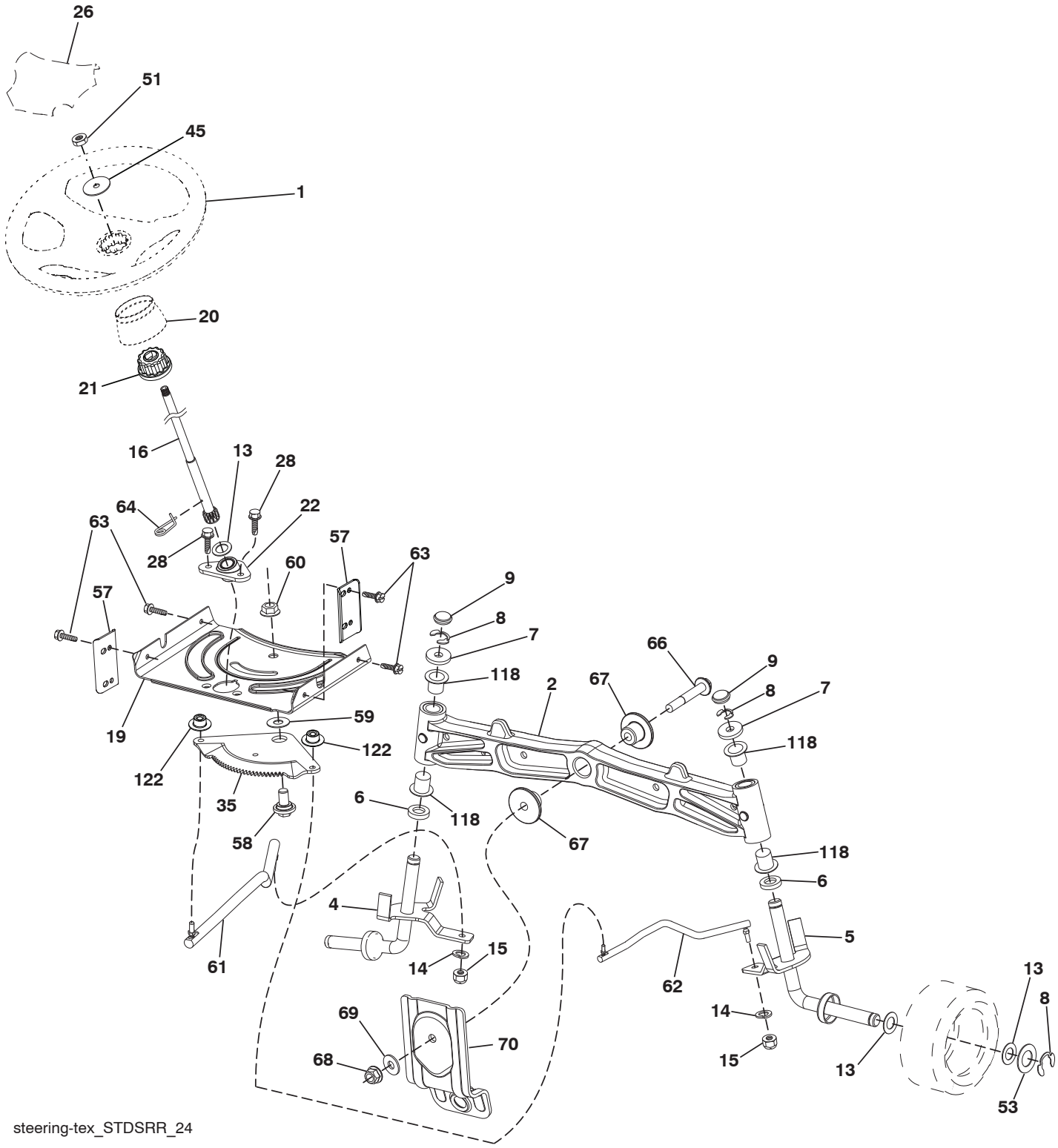

STEERING ASSEMBLY 41

KEY NO.	PART NO.	DESCRIPTION
1	532 42 41-46	Wheel, Steering
2	532 41 35-91	Axle Front
4	532 40 30-87	Spindle LH
5	532 40 30-88	Spindle RH
6	532 12 49-31	Washer Thrust 0.75 x 1.23
7	532 12 17-48	Washer 25/32 x 1-5/8 x 16 Ga.
8	812 00 00-29	Ring, Klip #T5304-75
9	532 12 12-32	Cap, Spindle
13	532 12 17-49	Washer 25/32 x 1-1/4 x 16 Ga.
14	810 04 06-00	Washer, Lock 3/8
15	873 54 06-00	Nut, Crown Lock 3/8-24 unf
16	532 19 47-46	Shaft Steering
19	532 19 47-29	Plate Steering
20	532 42 47-40	Boot Steering
21	532 18 67-37	Adapter, Wheel Steering
22	532 42 05-37	Steering Support Lower
26	532 42 41-47	Insert, Wheel Steering
28	817 00 06-12	Screw 3/8-16 x 3/4
35	532 19 47-32	Gear, Sector Plate
45	819 18 38-12	Washer 9/16 ID x 2-3/8 OD x 12 Ga.
51	873 94 08-00	Nut Hex Jam Toplock 1/2-20 unf
53	532 18 89-67	Washer Hardened .793 x 1.637 x .060
57	532 40 74-65	Bracket Upstop
58	532 19 47-47	Bolt Shoulder Sector Pivot CFM
59	532 19 47-48	Washer Thrust Sector Steering
60	873 97 10-00	Nut Flange Lock 5/8-11
61	532 19 47-40	Draglink, LH
62	532 19 47-41	Draglink, RH
63	817 00 05-12	Screw 5/16-18 x 3/4
64	532 19 98-49	Retainer Clip Spring Steering
66	871 02 07-48	Bolt Hex Fghd 7/16-14 x 3 Serr
67	532 19 47-37	Bushing PM Front Axle
68	873 90 07-00	Nut Lock Flange 7/16-14 Gr. 5
69	532 19 91-62	Washer 1.5 x .505 x .118
70	532 19 61-97	Bracket Deck Susp. Front
118	532 40 60-13	Bushing Axle
122	532 44 49-62	Cap Gear

NOTE: All component dimensions given in U.S. inches
1 inch = 25.4 mm

TRACTOR - - MODEL NO. LT2320 A2 (96041032101), PRODUCT NO. 960 41 03-21

MOWER DECK 44

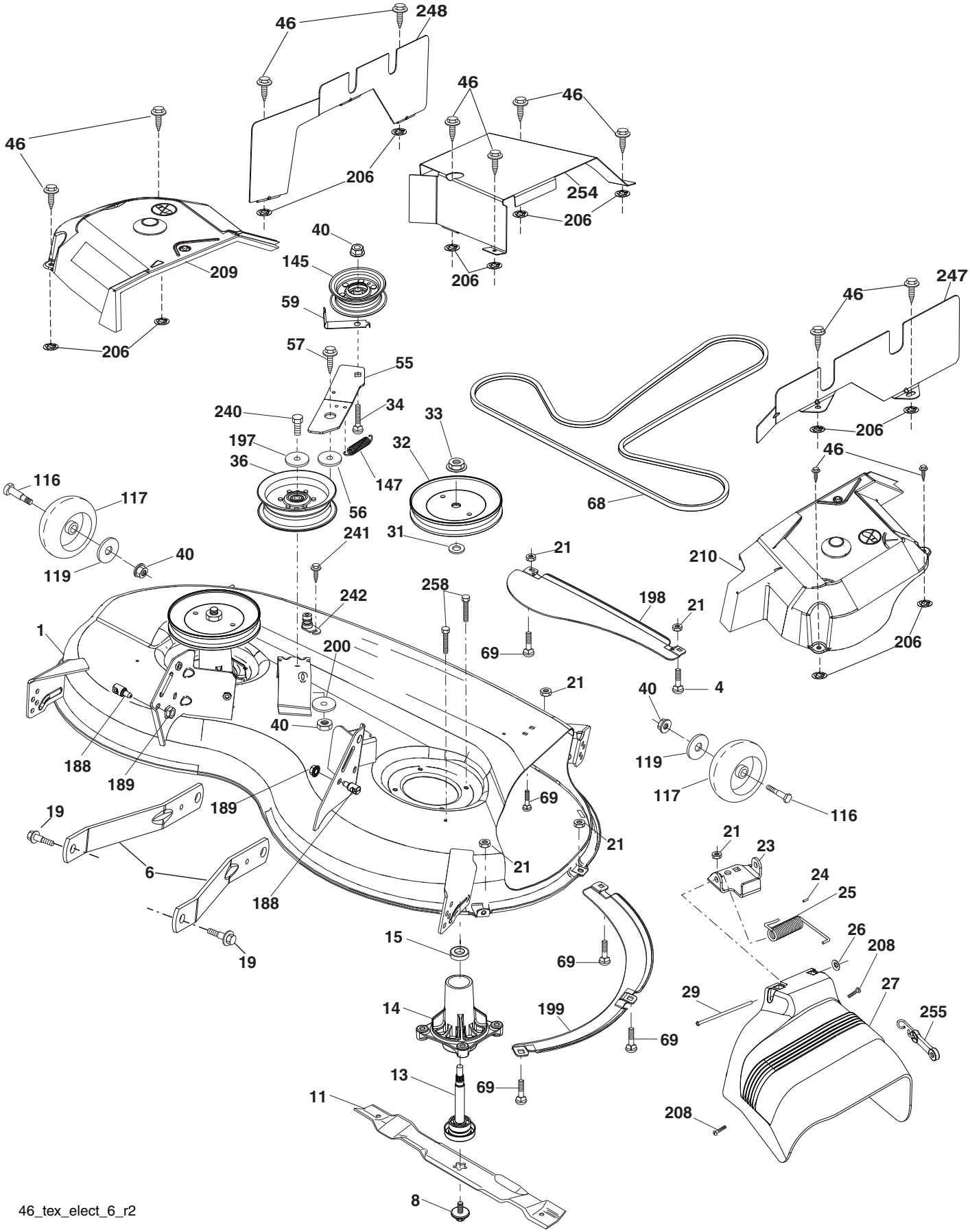

MOWER DECK 44

KEY NO.	PART NO.	DESCRIPTION
1	532 44 81-26	Mower Housing
4	874 76 05-12	Bolt Hex Hd 5/16-18 unc
6	532 19 51-86	Arm Suspension
8	532 19 30-03	Bolt/Washer asm 7/16-20 unf
11	532 40 53-80	Blade Mower Hi Lift
13	532 19 28-72	Shaft Assembly, Mandrel
14	532 18 72-81	Housing, Mandrel
15	532 11 04-85	Bearing, Ball, Mandrel
19	532 19 65-39	Bolt, Shoulder
21	873 68 05-00	Nut
23	532 19 25-57	Bracket, Deflector
24	532 10 53-04	Cap, Sleeve
25	532 19 70-26	Spring, Torsion, Deflector
26	532 11 04-52	Nut, Push
27	532 44 28-95	Shield, Deflector
29	532 13 14-91	Rod, Hinge
31	532 18 76-90	Washer, Spacer
32	532 19 74-73	Pulley, Mandrel
33	532 40 02-34	Nut, Toplock, Flanged
34	872 11 06-12	Bolt Carr Sh. 3/8-16 x 1-1/2 Gr. 5
36	532 19 73-79	Pulley, Idler, Flat
40	873 90 06-00	Nut, Lock Flg. 3/8-16 unc
46	532 13 77-29	Screw 1/4-20 x 5/8
55	532 19 72-49	Arm, Idler
56	532 19 90-92	Spacer, Retainer
57	817 00 06-16	Screw Hexwsh Thd 3/8-16 x 1
59	532 14 10-43	Guard, Tuv Idler (94)
68	532 40 51-43	V-Belt
69	872 14 05-05	Bolt
116	532 19 34-06	Bolt, Shoulder
117	532 17 48-73	Wheel, Gauge
119	819 13 20-12	Washer 13/32 x 1-1/2 x 11 Ga.
145	532 19 31-97	Pulley Idler
147	532 19 72-51	Spring Return
188	532 19 51-61	Stud Fastener
189	873 90 05-00	Nut Lock Hex Flange
197	819 13 13-12	Washer 13/32 x 13/16 x 12 Ga.
198	532 40 31-49	Baffle Center Front
199	532 40 31-50	Baffle Front RH
200	532 41 35-24	Washer 13/32 x 1 x 1/2 11 GAHRD
206	532 42 30-62	Palnut 1/4
208	817 67 06-08	Screw Thdrol 3/8-16 x 1/2
209	532 43 23-95	Cover Asm LH
210	532 43 23-96	Cover Asm RH
240	874 52 06-36	Bolt 3/8-16 unc x 2-1/4 Gr. 5
241	532 15 29-27	Screw
242	532 41 55-98	Washout Port
247	532 43 23-98	Cover Asm RH
248	532 43 23-97	Cover Asm LH
254	532 43 02-64	Shield Deck Rear
255	532 43 60-87	Kit Bungee (Includes Phillips head screw, weld nut, screw, bungee latch, and bungee strap)
258	584 95 39-01	Bolt hex Washer HD .313-18 x 1.19
- -	532 19 28-70	Mandrel Assembly (Includes housing (key #14), shaft assembly (key #13), bearing (key #15) and nut (key #33) only - pulley/washer and blade bolt/ washers not included)
- -	532 42 80-12	Replacement Mower, Complete

NOTE: All component dimensions given in U.S. inches
1 inch = 25.4 mm

MOWER LIFT 45

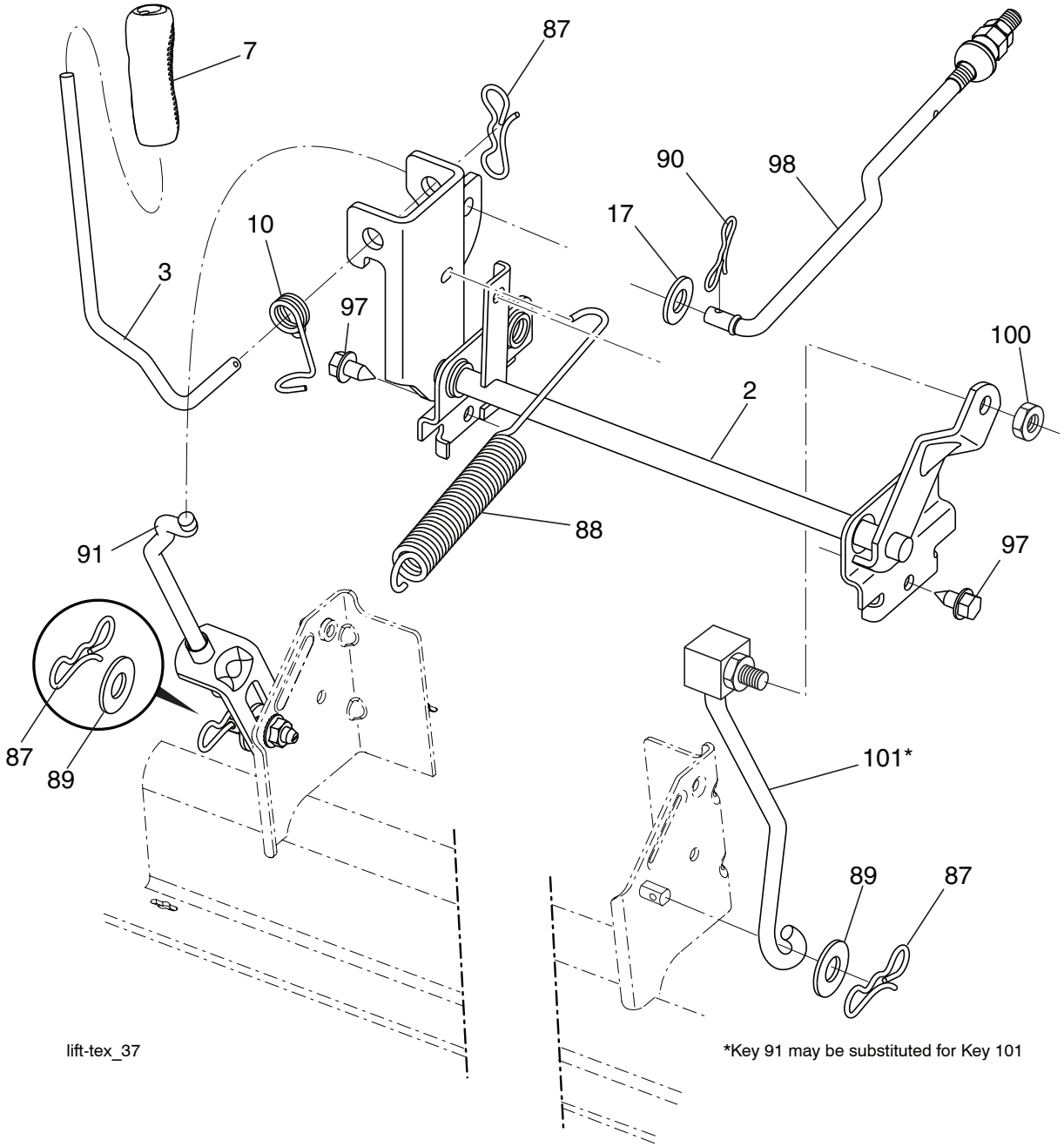

KEY NO.	PART NO.	DESCRIPTION
2	532 42 20-27	Shaft Asm., Lift
3	532 19 52-30	Lever Lift Handle
7	580 96 23-01	Grip, Lever
10	532 19 63-14	Spring Torsion
17	819 13 13-12	Washer 13/32 x 13/16 x 12 Ga.
87	532 19 42-09	Pin Cotter 7/16 Bow Tie Lock
88	532 41 07-10	Spring Lift Assist
89	819 19 19-12	Washer Clear Zinc
90	532 19 42-08	Pin Cotter 5/16 Bow Tie Lock

KEY NO.	PART NO.	DESCRIPTION
91	532 19 51-81	Link Lift Susp Mower Rear
97	817 00 06-12	Screw 3/8-16 x 3/4
98	532 19 52-70	Link Asm. Susp. Front Mower
100	873 93 06-00	Nut Centerlock 3/8-16 unc
101	532 40 70-03	Link Asm Lift Fixed

NOTE: All component dimensions given in U.S. inches
1 inch = 25.4 mm

SEAT ASSEMBLY 42

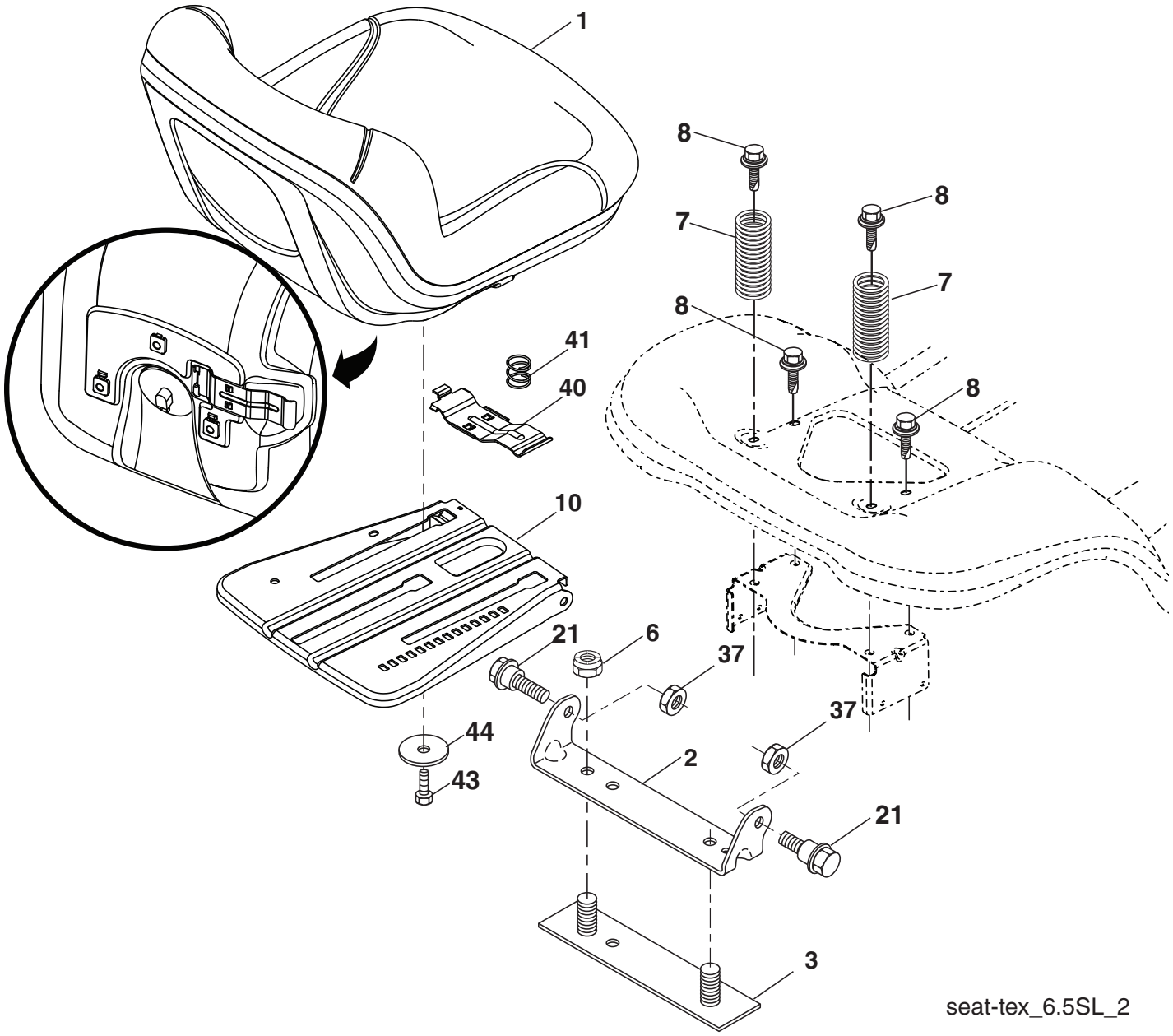

KEY NO.	PART NO.	DESCRIPTION
1	532 40 66-25	Seat
2	532 18 01-66	Bracket Pivot Fender
3	532 14 06-75	Strap, Asm Fender
6	873 80 06-00	Nut, Lock W/Ins. 3/8-16 unc
7	532 12 41-81	Spring, Seat Cprsn
8	532 17 18-77	Bolt 5/16-18 unc x 3/4 w/Sems
10	532 19 69-77	Pan, Seat
21	532 17 18-52	Bolt, Shoulder 5/16-18
37	873 80 05-00	Nut, Lock 5/16-18 unc
40	532 19 76-61	Handle Slide Seat
41	532 19 82-00	Spring Latch Seat
43	874 76 06-12	Bolt Fin Hex 3/8-16 unc x 3/4
44	819 13 38-12	Washer 13/32 x 2-3/8 x 12 Ga.

NOTE: All component dimensions given in U.S. inches
1 inch = 25.4 mm