# ILLUSTRATED PARTS LIST

# MODEL NO. 96041025200
# CUSTOMER CATALOG NO. LT2742 A2
# PRODUCT NO. 960 41 02-52

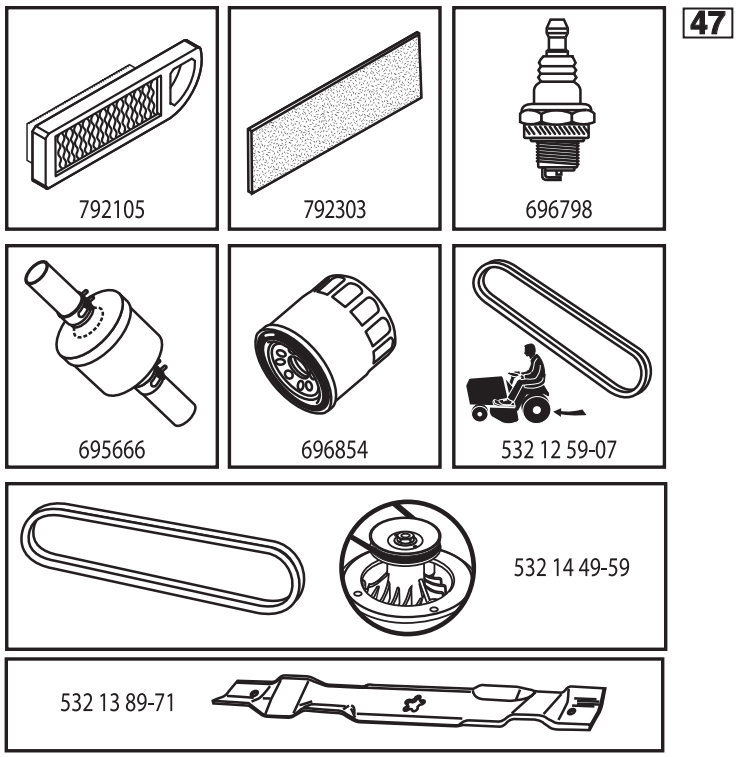


581891301

## TRACTOR - - MODEL NO. LT2742 A2 (96041025200), PRODUCT NO. 960 41 02-52
**DECALS 27**

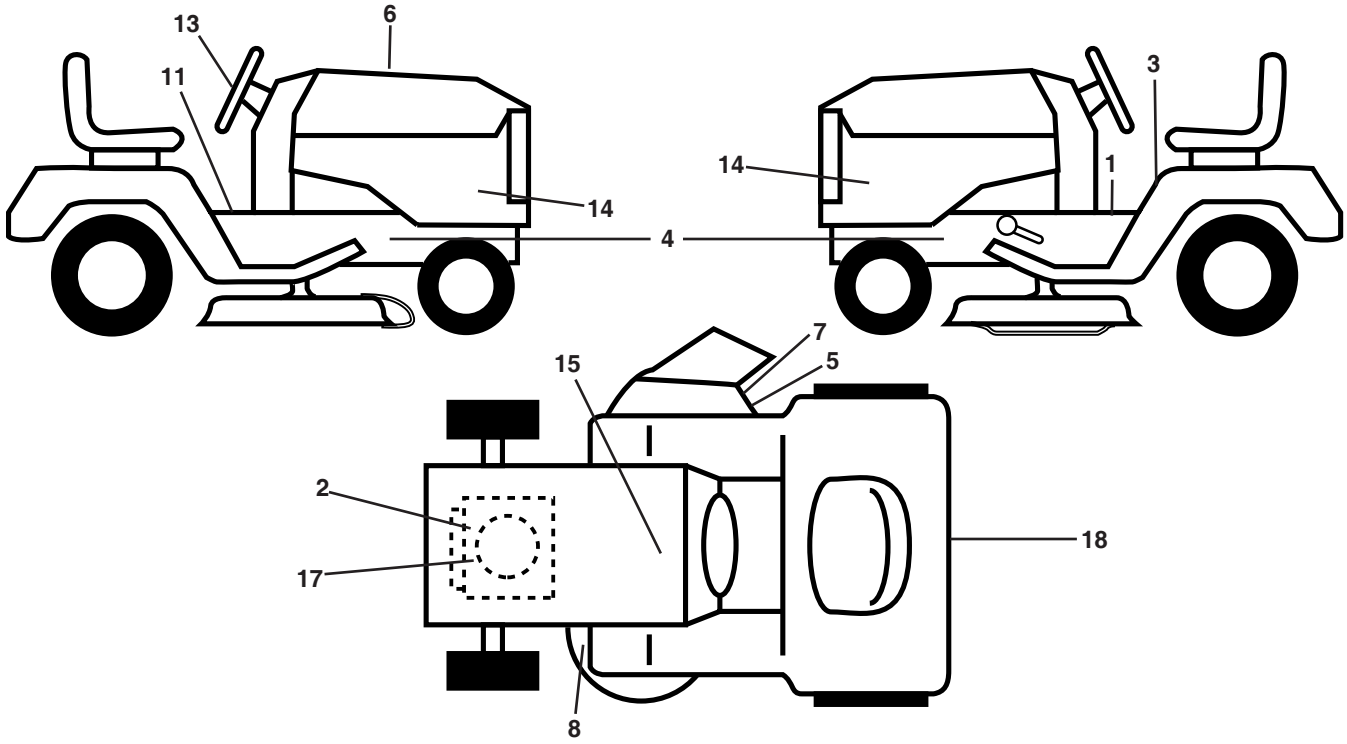


| KEY NO. | PART NO. | DESCRIPTION |
|---|---|---|
| 1 | 581 57 80-01 | Decal, Saddle |
| 2 | 581 57 97-01 | Decal, Warn. Eng. |
| 3 | 581 57 81-01 | Decal, Warn. Sym. |
| 4 | 581 57 96-01 | Decal, Chassis Hot |
| 5 | 581 57 92-01 | Decal, Deflect |
| 6 | 581 89 13-01 | Decal, RPL |
| 7 | 584 90 46-01 | Decal, Deck/Deflect. Warning |
| 8 | 581 58 00-01 | Decal, Mower Schematic |
| 11 | 581 72 40-01 | Decal, Brake/Clutch |
| 13 | 532 43 74-45 | Decal, Steering Whl |
| 14 | 581 67 36-02 | Decal, Panel Side |
| 15 | 532 14 50-05 | Decal, Decal, Battery Dan/Poi |
| 17 | 532 44 26-76 | Decal, Engine HP |
| 18 | 532 43 74-43 | Decal, Fender Logo |
| - - | 581 72 46-01 | Decal, Drawbar |
| - - | 581 72 48-01 | Decal, Bypass |
| - - | 532 40 95-07 | Pad, Footrest, LH |
| - - | 532 40 95-05 | Pad, Footrest, RH |
| - - | 585 66 17-26 | Manual, Operator's (Eng) |

## WHEELS AND TIRES

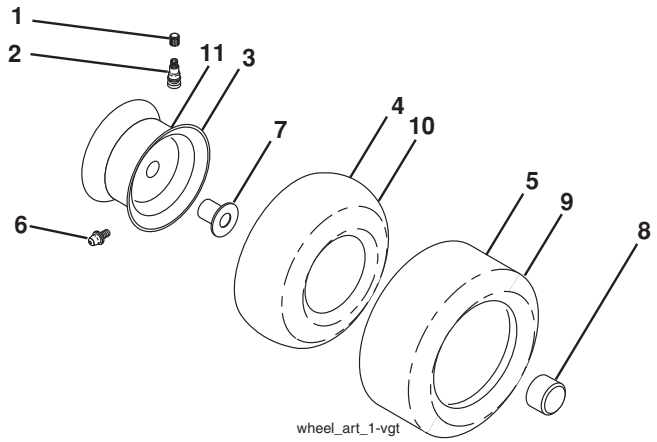


| KEY NO. | PART NO. | DESCRIPTION |
|---|---|---|
| 1 | 532 05 91-92 | Cap, Valve, Tire |
| 2 | 532 06 51-39 | Stem, Valve |
| 3 | 532 13 83-36 | Rim Assembly, Front |
| 4 | 532 00 81-34 | Tube, Front (Service Item Only) |
| 5 | 532 10 62-22 | Tire, Front 16 x 6.5-8 |
| 6 | 532 12 49-57 | Fitting, Grease (Front Wheel Only) |
| 7 | 532 12 49-59 | Bearing, Flange (Front Wheel Only) |
| 8 | 532 17 50-39 | Cap, Axle (Front Wheel Only) |
| 9 | 532 13 84-68 | Tire, Rear 23 x 10.5-12 |
| 10 | 532 00 71-54 | Tube, Rear (Service Item Only) |
| 11 | 532 13 83-37 | Rim Assembly, Rear |
| - - | 532 14 43-34 | Sealant, Tire (10 oz. Tube) |

**NOTE:** All component dimensions given in U.S. inches
1 inch = 25.4 mm

# TRACTOR - - MODEL NO. LT2742 A2 (96041025200), PRODUCT NO. 960 41 02-52

## SCHEMATIC 38

SCH12

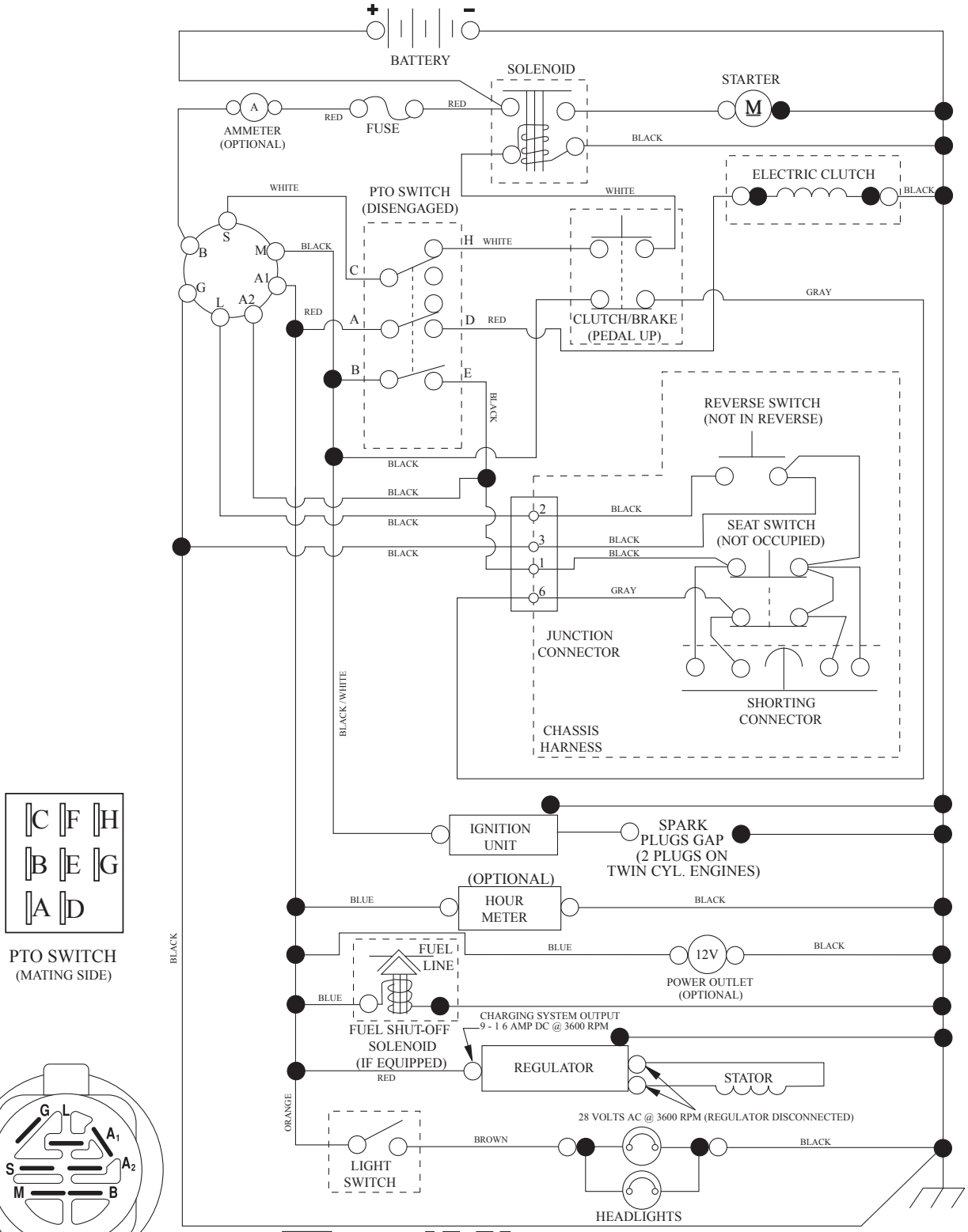





PTO SWITCH
(MATING SIDE)

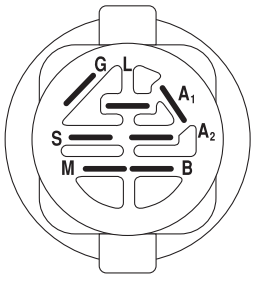


IGNITION SWITCH

| POSITION | CIRCUIT "MAKE" |
|---|---|
| OFF | M+G+A1 |
| RUN/OVERRIDE | B+A1 |
| RUN | B+A1 L+A2 |
| START | B + S + A1 |

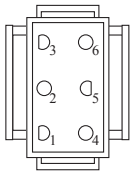


CHASSIS HARNESS CONNECTOR (MATING SIDE)

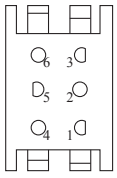


DASH HARNESS CONNECTOR

WIRING INSULATED CLIPS
NOTE: IF WIRING INSULATED CLIPS WERE REMOVED FOR SERVICING OF UNIT, THEY SHOULD BE RE-INSTALLED TO PROPERLY SECURE YOUR WIRING.

NON-REMOVABLE CONNECTIONS

REMOVABLE CONNECTIONS

# TRACTOR - - MODEL NO. LT2742 A2 (96041025200), PRODUCT NO. 960 41 02-52
## ELECTRICAL 32

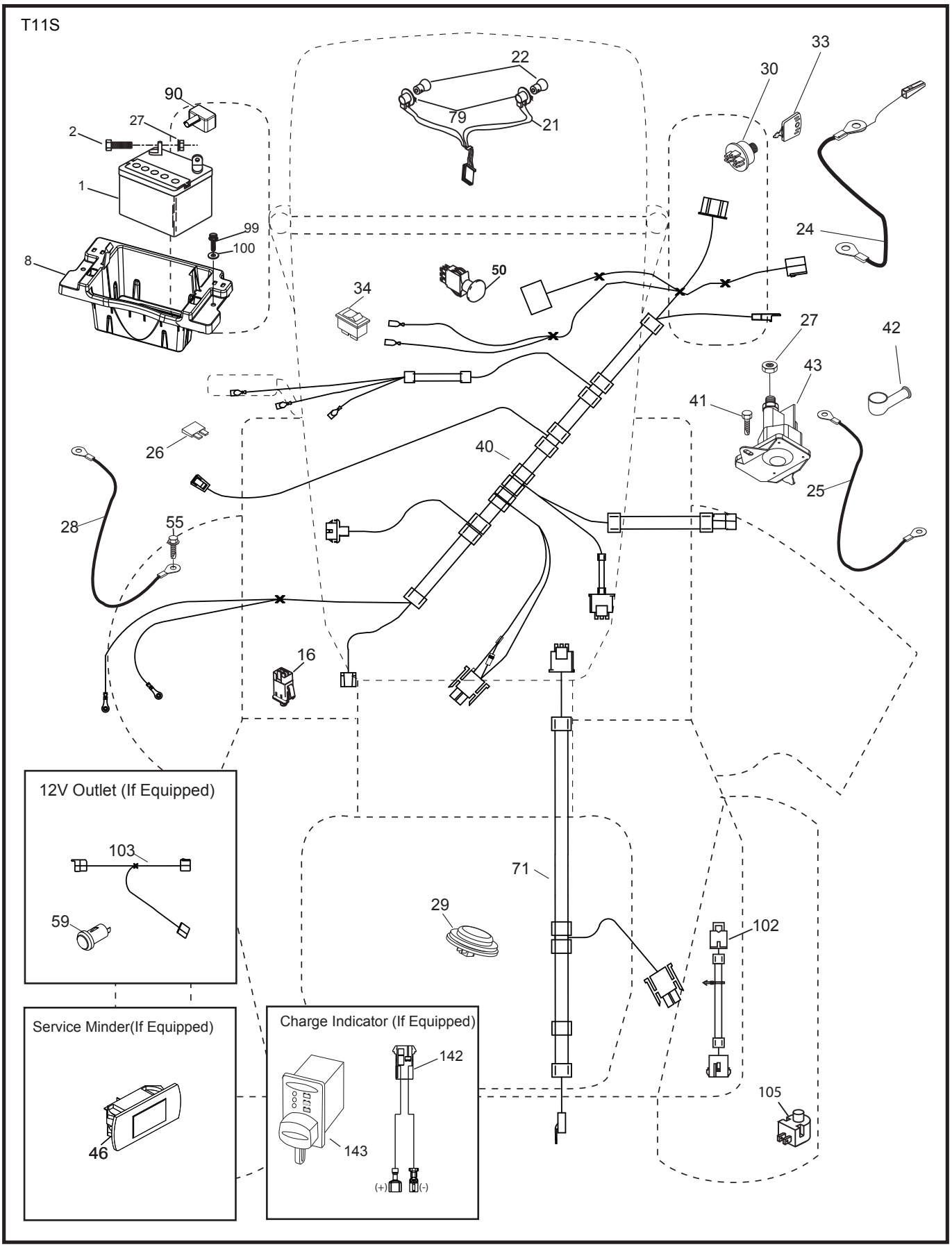

| KEY NO. | PART NO. | DESCRIPTION |
|---|---|---|
| 1 | 532 16 34-65 | Battery |
| 2 | 874 76 04-12 | Bolt Hex Hd 1/4-20 unc x 3/4 |
| 8 | 587 20 51-01 | Battery Box |
| 16 | 532 17 61-38 | Switch Interlock |
| 21 | 532 40 02-52 | Harness Socket Light |
| 22 | 532 00 41-52 | Bulb, Light # 1156 |
| 24 | 585 55 56-01 | Cable Battery |
| 25 | 585 55 55-01 | Cable Starter |
| 26 | 532 17 51-58 | Fuse |
| 27 | 873 51 04-00 | Nut Keps Hex 1/4-20 unc |
| 28 | 532 41 65-88 | Cable Ground 21" Blk 6 Ga. |
| 29 | 532 40 15-45 | Switch Seat |
| 30 | 532 19 33-50 | Switch Ign |
| 33 | 532 41 19-35 | Key/Chain |
| 34 | 532 11 07-12 | Switch Light/Reset |
| 40 | 532 40 11-04 | Harness Dash |
| 41 | 817 72 04-08 | Screw Thd Cut 1/4-20 x 1/2 |
| 42 | 532 13 15-63 | Cover Terminal Red |
| 43 | 532 19 25-07 | Solenoid |
| 46 | 532 40 17-63 | Gauge Hourmeter |
| 50 | 532 17 46-51 | Switch PTO |
| 55 | 817 06 05-12 | Screw Thdrol 5/16-18 x 3/4 |
| 71 | 532 19 42-76 | Harness Chassis |
| 79 | 532 17 52-42 | Socket Asm Bulb Twistlock |
| 90 | 532 43 53-95 | Cover Terminal Battery |
| 99 | 817 67 04-12 | Screw Hexwsh Thdrol 1/4-20 x 3/4 |
| 100 | 819 09 14-16 | Washer 9/32 x 7/8 x 16 Ga. |
| 102 | 532 40 44-54 | Harness Pigtail |
| 105 | 532 40 75-68 | Switch Reverse TT Pedal Control |

**NOTE:** All component dimensions given in U.S. inches
1 inch = 25.4 mm

# TRACTOR - - MODEL NO. LT2742 A2 (96041025200), PRODUCT NO. 960 41 02-52

## CHASSIS AND ENCLOSURES 39

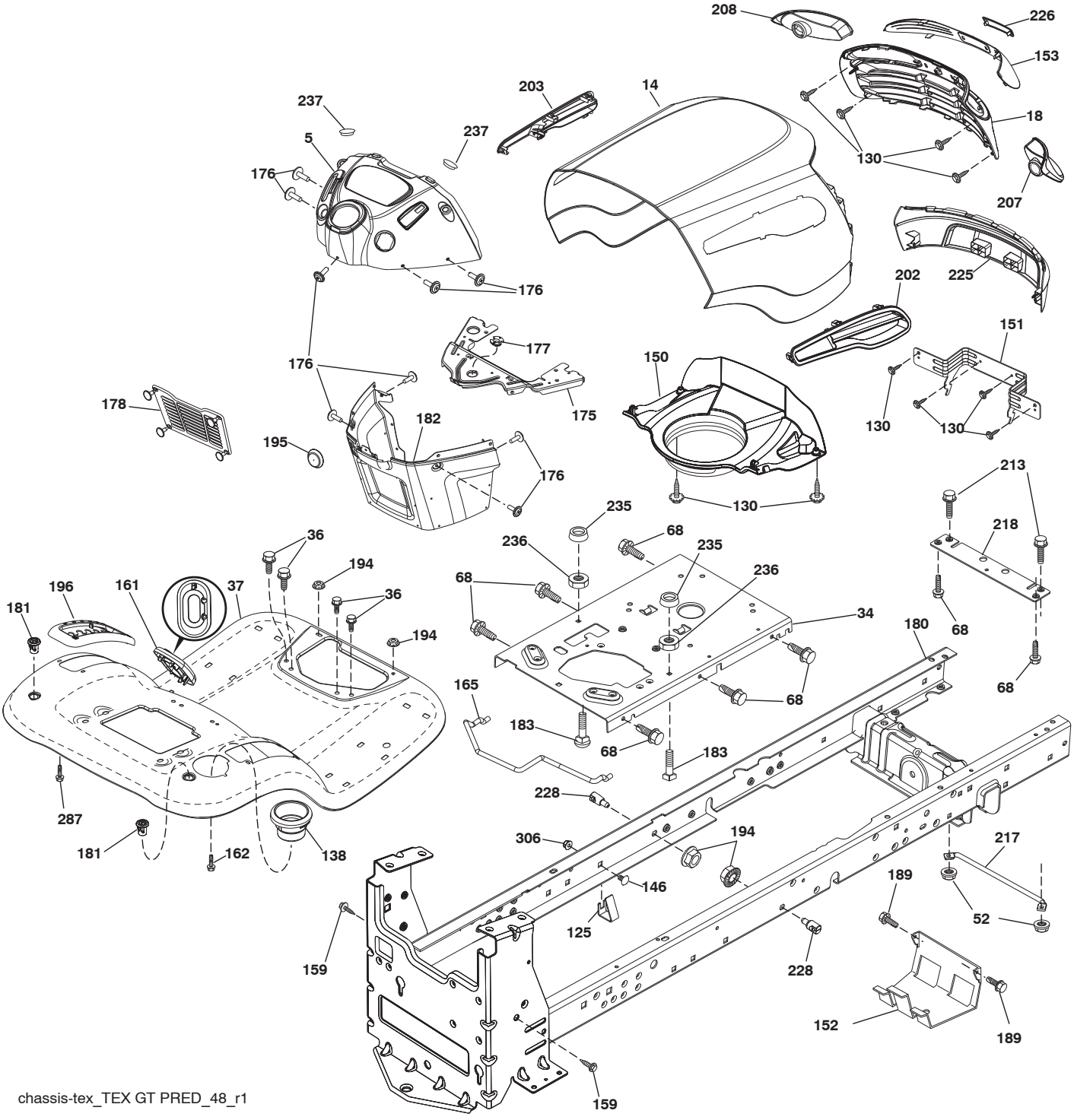

# TRACTOR - - MODEL NO. LT2742 A2 (96041025200), PRODUCT NO. 960 41 02-52
## CHASSIS AND ENCLOSURES 39

| KEY NO. | PART NO. | DESCRIPTION |
|---|---|---|
| 5 | 532 42 82-71 | Dash |
| 14 | 532 44 38-24 | Hood |
| 18 | 532 42 73-33 | Grille |
| 34 | 580 91 08-01 | Plate Engine |
| 36 | 817 06 05-12 | Screw 5/16-18 x 3/4 |
| 37 | 586 39 41-01 | Fender |
| 52 | 873 68 05-00 | Nut Crown Lock 5/16-18 |
| 68 | 817 49 05-08 | Screw 5/16-18 x 1/2 |
| 125 | 581 68 48-01 | Clip Line Fuel |
| 130 | 532 41 63-58 | Screw #10 x 0.750 BOS Thread |
| 138 | 532 40 97-30 | Cupholder |
| 146 | 581 85 79-01 | Bolt 3/8-16 x 5/8 |
| 150 | 584 86 29-01 | Air Duct |
| 151 | 532 44 54-94 | Bracket Pivot |
| 152 | 532 19 95-35 | Shield Browning |
| 153 | 532 42 47-17 | Lens Asm |
| 159 | 817 00 06-12 | Screw 3/8-16 x 3/4 |
| 161 | 532 41 20-72 | Window Fuel |
| 162 | 532 14 24-32 | Screw |
| 165 | 532 19 68-26 | Support Tank Rear |
| 175 | 532 19 63-04 | Crossmember |
| 176 | 532 40 07-76 | Screw 10-24 x 5/8 |
| 177 | 532 19 52-28 | Bushing Steering |
| 178 | 532 19 97-82 | Cargo Asm. Net |
| 180 | 532 19 54-57 | Chassis |
| 181 | 532 40 47-96 | Bushing Mtg. Fender Crgo |
| 182 | 532 40 68-59 | Dash Lower |
| 183 | 874 52 05-20 | Bolt Fin Hex 5/16-18 unc x 1-1/4 |
| 189 | 817 00 05-12 | Screw 5/16-18 x 3/4 |
| 194 | 873 90 05-00 | Nut Lock Hex Flange 5/16-18 |
| 195 | 532 40 41-37 | Plug Hole Dash Lower |
| 196 | 532 41 45-79 | Console Asm. Deck Lift |
| 202 | 532 44 54-26 | Vent Side RH |
| 203 | 532 44 55-83 | Vent Side LH |
| 207 | 532 19 89-64 | Bezel LH |
| 208 | 532 19 89-63 | Bezel RH |
| 213 | 874 76 05-12 | Bolt Hex HD 5/16-18 unc x 3/4 |
| 217 | 532 40 91-67 | Rod Pivot Hood |
| 218 | 532 19 63-95 | X-Piece Hood Stop |
| 225 | 532 44 38-25 | Bumper |
| 226 | 532 42 47-16 | Logo |
| 228 | 532 19 51-61 | Stud Fastner |
| 235 | 532 40 61-29 | Spacer Fender |
| 236 | 873 93 05-00 | Nut Lock 5/16-18 unc |
| 237 | 532 40 37-04 | Plug Mount Cargo |
| 287 | 817 60 04-06 | Screw Hex |
| 306 | 873 90 06-00 | Nut Lock 3/8- unc |

**NOTE:** All component dimensions given in U.S. inches
1 inch = 25.4 mm

# TRACTOR - - MODEL NO. LT2742 A2 (96041025200), PRODUCT NO. 960 41 02-52
## DRIVE 40

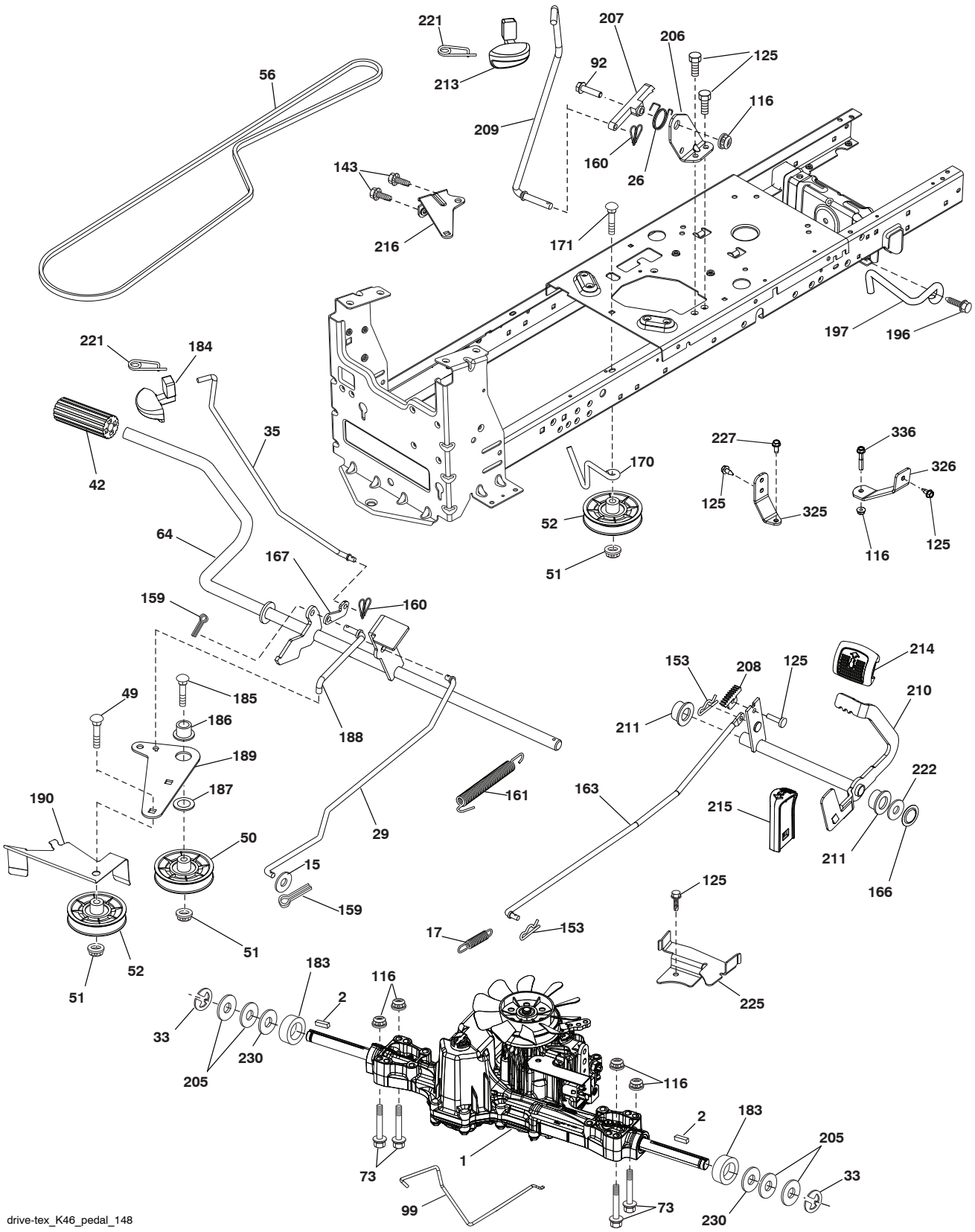

# TRACTOR - - MODEL NO. LT2742 A2 (96041025200), PRODUCT NO. 960 41 02-52
## DRIVE 40

| KEY NO. | PART NO. | DESCRIPTION |
|---|---|---|
| 1 | – – – – – – | Transaxle, TUFFTORQ K46BT (426120) (Order parts from transaxle manufacturer.) |
| 2 | 532 12 35-83 | Key Square |
| 15 | 819 13 13-16 | Washer 13/32 x 13/16 x 16 Ga. |
| 17 | 532 41 36-78 | Spring, Brake |
| 26 | 532 19 96-79 | Spring Return Cruise |
| 29 | 532 40 38-06 | Rod, Brake |
| 33 | 812 00 00-01 | Ring E |
| 35 | 583 86 45-01 | Rod, Brake, Park |
| 42 | 532 12 48-72 | Cover, Foot Pedal |
| 49 | 872 11 06-14 | Bolt |
| 50 | 532 19 43-27 | Pulley Idler Flat |
| 51 | 873 90 06-00 | Lock Nut 3/8-16 |
| 52 | 532 19 43-26 | Idler V-Groove Offset |
| 56 | 532 13 09-69 | V-Belt, Drive |
| 64 | 532 19 78-65 | Shaft Asm. Pedal Brake Control |
| 73 | 874 49 05-40 | Bolt Hex 5/16-18 x 2 1/2 G.5 |
| 92 | 874 76 05-20 | Bolt Fin Hex 5/16-18 unc x 1.25 |
| 99 | 532 41 57-42 | Rod Spring Bypass |
| 116 | 873 90 05-00 | Nut Lock Hex Flange 5/16-18 |
| 125 | 817 00 05-12 | Screw 5/16-18 x 3/4 |
| 143 | 817 49 05-08 | Screw 5/16-18 x 1/2 |
| 153 | 532 12 47-88 | Retainer Spring 1" |
| 159 | 876 02 04-12 | Pin Cotter 1/8 x 3/4 |
| 160 | 532 16 94-84 | Retainer Clip |
| 161 | 532 10 57-09 | Spring, Return, Clutch |
| 163 | 532 44 82-75 | Rod Control |
| 166 | 532 42 91-64 | Nut Push |
| 167 | 532 40 52-57 | Latch Brake Parking |
| 170 | 532 19 43-22 | Keeper V-Idler |
| 171 | 872 11 06-16 | Bolt 3/8-16 unc x 2 |
| 183 | 532 13 70-57 | Spacer Axle |
| 184 | 532 44 14-55 | Handle Parking Brake |
| 185 | 872 11 06-22 | Bolt |
| 186 | 532 19 43-21 | Spacer Retainer |
| 187 | 819 13 32-10 | Washer |
| 188 | 532 19 43-23 | Link Clutch Ground Drive |
| 189 | 532 19 43-17 | Bellcrank Ground Drive |
| 190 | 532 19 43-18 | Keeper Bellcrank Ground Drive |
| 196 | 817 00 06-16 | Screw |
| 197 | 585 65 86-01 | Link Clutch Anti-Rotation |
| 205 | 532 12 17-48 | Washer 25/32 x 1-5/8 x 16 Ga. |
| 206 | 532 44 85-96 | Bracket Mount Latch Cruise |
| 207 | 532 19 78-68 | Latch Control Cruise |
| 208 | 532 19 78-69 | Gear Sector Control Cruise |
| 209 | 532 19 95-92 | Rod Control Cruise |
| 210 | 532 40 09-80 | Rocker Asm. Pedal Control |
| 211 | 532 12 01-83 | Bearing Nylon |
| 213 | 532 40 31-19 | Knob Control Cruise |
| 214 | 532 42 12-63 | Pedal Forward |
| 215 | 532 40 17-23 | Pedal Reverse |
| 216 | 532 19 61-31 | Bracket Pulley Idler |
| 221 | 532 40 31-87 | Retainer Spring Clip Handle |
| 222 | 879 21 20-10 | Washer 21/32 x 1-1/4 10 Ga. |
| 225 | 532 40 33-19 | Keeper Belt Transaxle |
| 227 | 817 49 05-12 | Screw 5/16-18 x 3/4 |
| 230 | 532 18 89-67 | Washer .793 x 1.637 x 060 |
| 325 | 585 66 85-02 | Torque Strap K46 LT RH |
| 326 | 585 67 08-02 | Bracket Trq Stp 46 20" Tire RH |
| 336 | 587 25 96-01 | Bolt 5/16-18 x 1-3/4 Flanged |

**NOTE:** All component dimensions given in U.S. inches
1 inch = 25.4 mm

**TRACTOR - - MODEL NO. LT2742 A2 (96041025200), PRODUCT NO. 960 41 02-52**
**ENGINE 24**

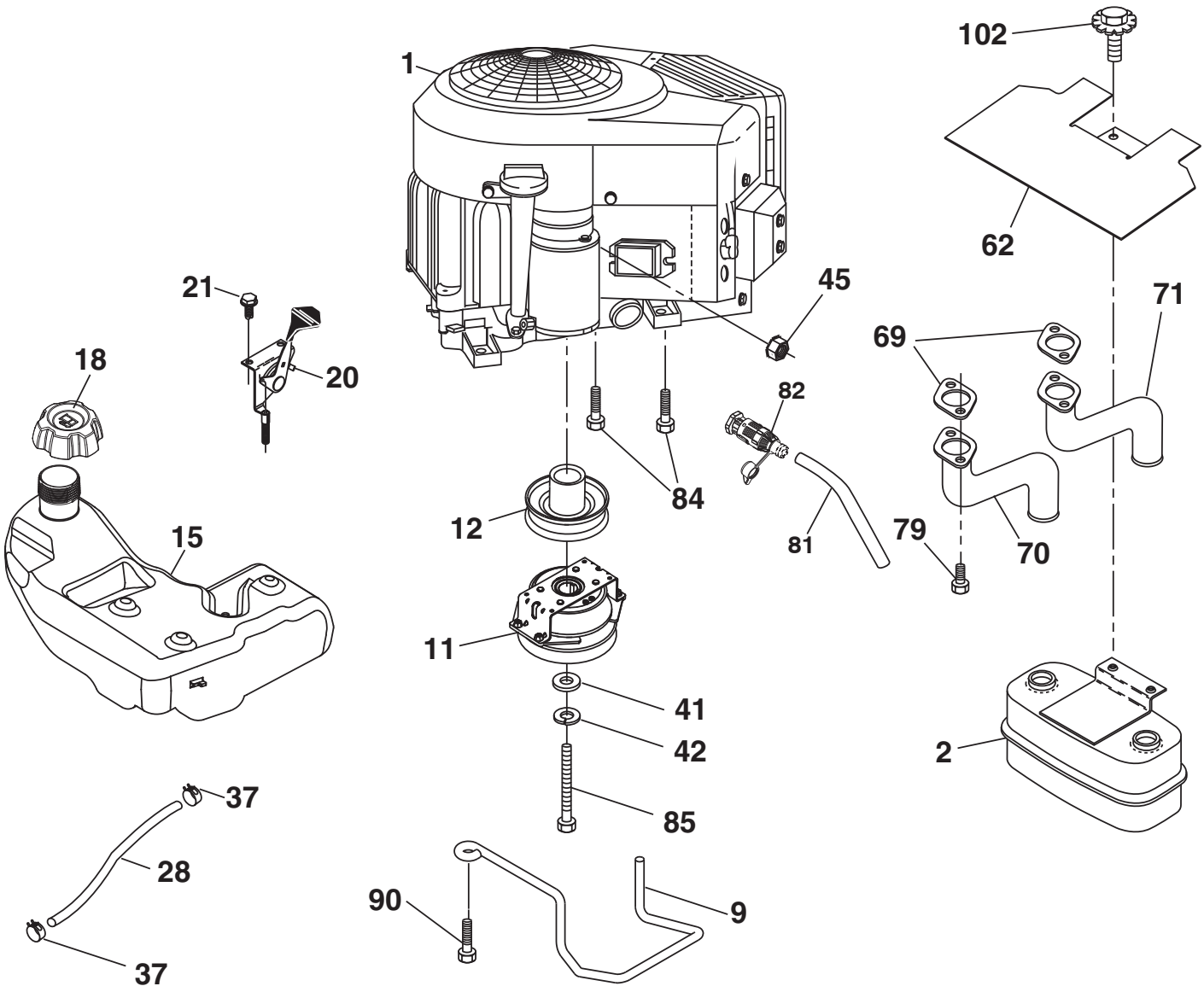


**SPARK ARRESTER KIT**

engine-tex_bs-2cyl_126_r1

| KEY NO. | PART NO. | DESCRIPTION |
|---|---|---|
| 1 | – – – – – – | Briggs Model No. 44Q777-0003-G5 (585878901) (Order parts from engine manufacturer.) |
| 2 | 532 14 97-23 | Muffler |
| 9 | 584 90 80-01 | Keeper Belt Engine |
| 11 | 587 24 15-01 | Clutch Electric |
| 12 | 532 40 50-97 | Pulley Engine |
| 15 | 532 43 80-80 | Tank Fuel 4.0 |
| 18 | 532 43 02-14 | Cap Asm |
| 20 | 532 42 35-02 | Control Throttle |
| 21 | 532 41 63-58 | Screw #10 x 0.750 BOS Thread |
| 28 | 532 14 21-58 | Fuel Line |
| 29 | 532 13 71-80 | Spark Arrester Kit |
| 37 | 532 12 34-87 | Clamp Hose |
| 41 | 532 12 61-97 | Washer 1-1/2 OD x 15/32 ID x .250 |
| 42 | 810 04 07-00 | Washer Lock 7/16 |
| 45 | 873 51 04-00 | Nut Keps Hex 1/4-20 unc |
| 62 | 532 43 40-17 | Shield Heat Muffler |
| 69 | 532 16 53-91 | Gasket |
| 70 | 581 88 11-01 | Tube Exhaust LH |
| 71 | 581 88 10-01 | Tube Exhaust RH |
| 79 | 532 18 39-06 | Screw Socket HD 5/16-18 x 1 |
| 81 | 532 14 84-56 | Tube Drain Oil Easy |
| 82 | 532 42 82-87 | Plug Drain Oil |
| 84 | 817 06 06-20 | Screw 3/8-16 x 1 |
| 85 | 581 33 28-04 | Bolt 7/16-20 x 3.5 Gr. 5 |
| 90 | 817 00 06-16 | Screw 3/8-16 x 1 |
| 102 | 817 00 05-12 | Screw 5/16-18 x 3/4 |

**NOTE:** All component dimensions given in U.S. inches
1 inch = 25.4 mm

**Engine Power Rating Information**

The gross power rating for individual gas engine models is labeled in accordance with SAE (Society of Automotive Engineers) code J11940 (Small Engine Power & Torque Rating Procedure), and rating performance has been obtained and corrected in accordance with SAE J1995 (Revision 2002-5). Actual gross engine power will be lower and is affected by, among other things, ambient operating conditions and engine-to-engine variability. Given both the wide array of products on which engines are placed and the variety of environmental issues applicable to operating the equipment, the gas engine will not develop the rated gross power when used in a given piece of power equipment (actual “on-site” or net horsepower). This difference is due to a variety of factors including, but not limited to, accessories (air cleaner, exhaust, charging, cooling, carburetor, fuel pump, etc.), application limitations, ambient operating conditions (temperature, humidity, altitude), and engine-to-engine variability. Due to manufacturing and capacity limitations, Briggs & Stratton may substitute an engine of higher rated power for this Series engine.

# TRACTOR - - MODEL NO. LT2742 A2 (96041025200), PRODUCT NO. 960 41 02-52

## STEERING ASSEMBLY 41

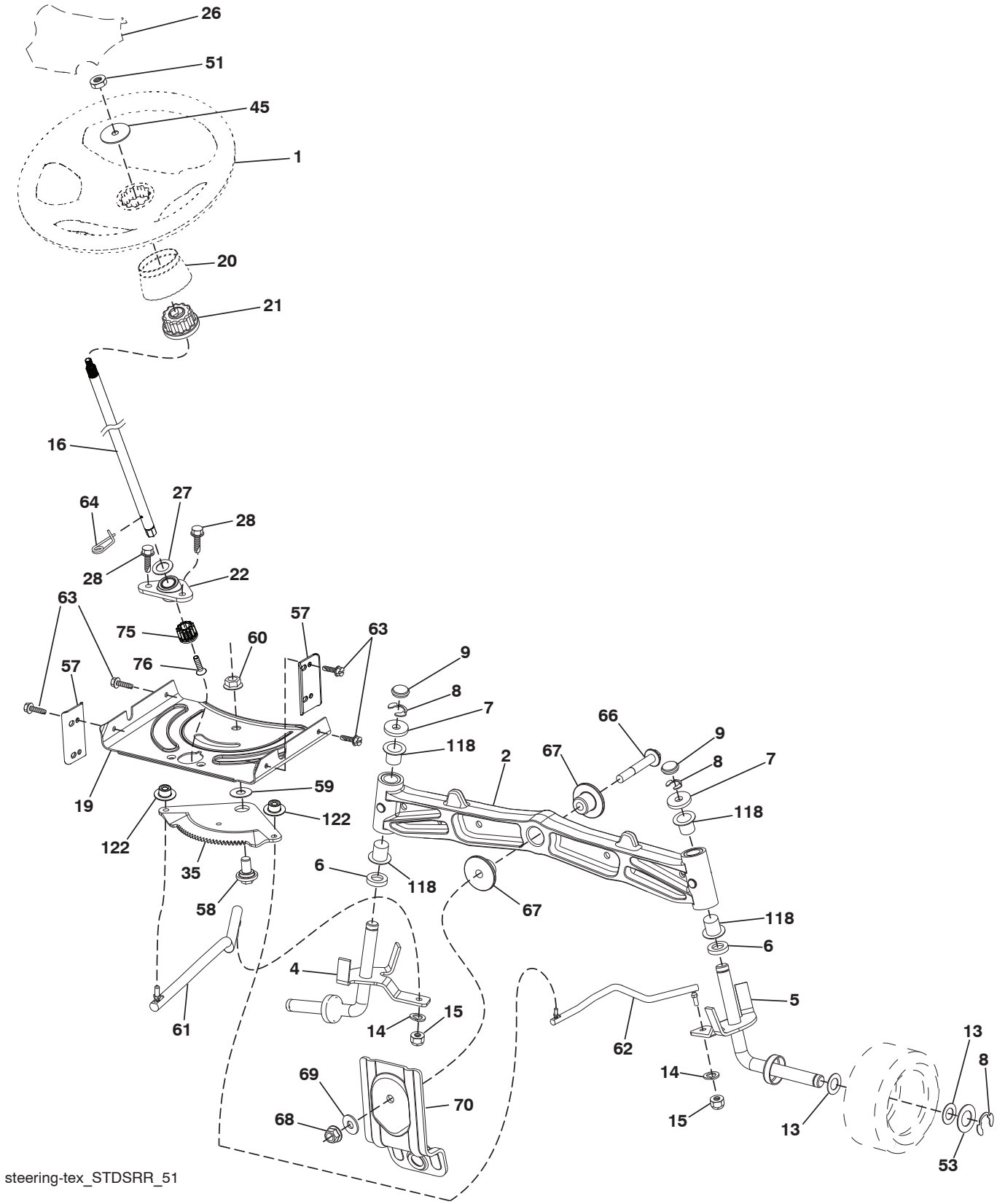

# TRACTOR - - MODEL NO. LT2742 A2 (96041025200), PRODUCT NO. 960 41 02-52

## STEERING ASSEMBLY 41

| KEY NO. | PART NO. | DESCRIPTION |
|---|---|---|
| 1 | 532 42 41-46 | Wheel, Steering |
| 2 | 532 19 59-68 | Axle Asm., Front |
| 4 | 532 40 30-87 | Spindle Asm., LH |
| 5 | 532 40 30-88 | Spindle Asm., RH |
| 6 | 532 12 49-31 | Bearing, Race Thrust Harden |
| 7 | 532 12 17-48 | Washer 25/32 x 1-5/8 x 16 Ga. |
| 8 | 812 00 00-29 | Ring, Clip #T5304-75 |
| 9 | 532 12 12-32 | Cap, Spindle |
| 13 | 532 12 17-49 | Washer 25/32 x 1-1/4 x 16 Ga. |
| 14 | 810 04 06-00 | Washer, Lock Hvy Hlcl Spr 3/8 |
| 15 | 873 54 06-00 | Nut, Crown Lock 3/8-24 unf |
| 16 | 587 01 60-02 | Steering Shaft |
| 19 | 532 19 47-29 | Plate Steering |
| 20 | 532 42 47-40 | Boot Steering |
| 21 | 586 84 02-01 | Adapter Wheel Steering |
| 22 | 585 02 98-02 | Bearing |
| 26 | 532 42 41-47 | Insert, Wheel Steering |
| 27 | 819 21 16-16 | Washer |
| 28 | 817 00 06-12 | Screw 3/8-16 x 3/4 |
| 35 | 532 19 47-32 | Gear, Sector Plate |
| 45 | 587 01 64-01 | Washer 3/8 ID 2-3/8 OD 12 Ga. PLTD |
| 50 | 873 90 06-00 | Nut Lock Flg 3/8-16 unc |
| 53 | 532 18 89-67 | Washer Hardened .793 x 1.637 x .060 |
| 57 | 532 40 74-65 | Bracket Upstop |
| 58 | 532 19 47-47 | Bolt Shoulder Sector Pivot CFM |
| 59 | 532 19 47-48 | Washer Thrust Sector Steering |
| 60 | 873 97 10-00 | Nut Flange Lock 5/8-11 |
| 61 | 532 19 47-40 | Draglink, LH |
| 62 | 532 19 47-41 | Draglink, RH |
| 63 | 817 00 05-12 | Screw 5/16-18 x 3/4 |
| 64 | 532 19 98-49 | Retainer Clip Spring Steering |
| 66 | 871 02 07-48 | Bolt Hex Fghd 7/16-14 x 3 Serr |
| 67 | 532 19 47-37 | Bushing PM Front Axle |
| 68 | 873 90 07-00 | Nut Lock Flange 7/16-14 Gr. 5 |
| 69 | 532 19 91-62 | Washer 1.5 x .505 x .118 |
| 70 | 532 19 61-97 | Bracket Deck Susp. Front |
| 75 | 580 68 37-01 | Pinion |
| 76 | 580 68 36-01 | Screw Head Sock |
| 118 | 532 40 60-13 | Bushing |
| 122 | 532 44 49-62 | Cap Gear Sector |

**NOTE:** All component dimensions given in U.S. inches
1 inch = 25.4 mm

# TRACTOR - - MODEL NO. LT2742 A2 (96041025200), PRODUCT NO. 960 41 02-52

## MOWER DECK 44

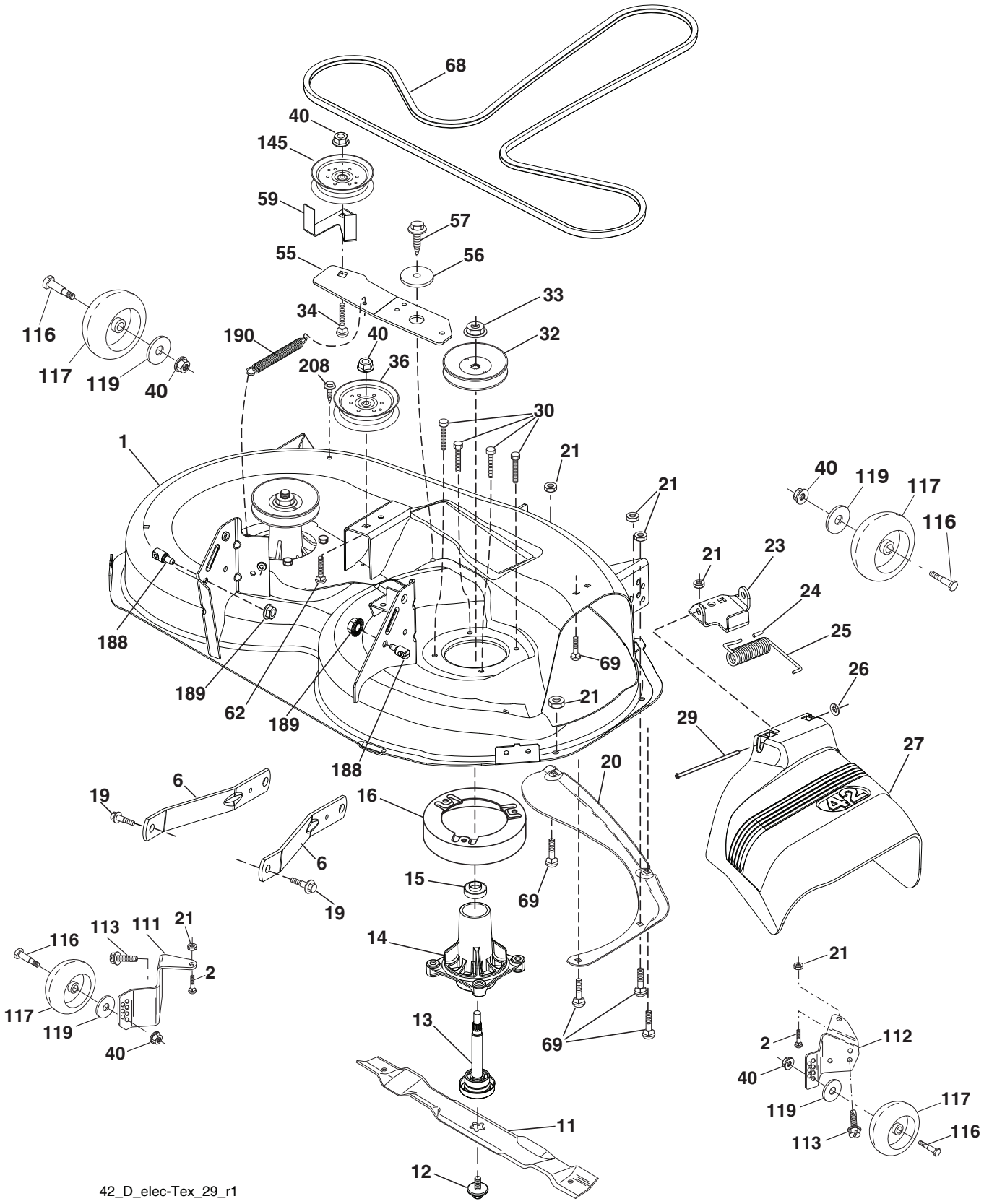

# TRACTOR - - MODEL NO. LT2742 A2 (96041025200), PRODUCT NO. 960 41 02-52
## MOWER DECK 44

| KEY NO. | PART NO. | DESCRIPTION |
|---|---|---|
| 1 | 532 19 64-95 | Mower Housing |
| 2 | 872 14 05-06 | Bolt 5/16-18 unc x 3/4 |
| 6 | 532 19 51-86 | Arm Suspension |
| 11 | 532 13 89-71 | Blade |
| 12 | 584 30 93-01 | Screw 7/16-20 x 1 Hex |
| 13 | 587 25 65-01 | Shaft Assembly, Mandrel |
| 14 | 532 18 72-81 | Housing, Mandrel |
| 15 | 585 32 39-01 | Bearing, Mandrel |
| 16 | 532 17 44-93 | Stripper |
| 19 | 532 19 65-39 | Bolt, Shoulder |
| 20 | 532 15 97-70 | Baffle, Vortex |
| 21 | 873 68 05-00 | Nut, Crownlock 5/16-18 unc |
| 23 | 532 19 25-57 | Bracket, Deflector |
| 24 | 532 10 53-04 | Cap, Sleeve |
| 25 | 532 19 70-26 | Spring, Torsion, Deflector |
| 26 | 532 11 04-52 | Nut, Push |
| 27 | 532 40 30-04 | Shield, Deflector |
| 29 | 532 13 14-91 | Rod, Hinge |
| 30 | 532 17 39-84 | Screw Thdrol Rolling Wsh Hd |
| 32 | 532 15 35-35 | Pulley, Mandrel |
| 33 | 532 40 02-34 | Nut, Toplock, Flanged |
| 34 | 872 11 06-12 | Bolt Carr Sh. 3/8-16 x 1-1/2 Gr. 5 |
| 36 | 532 19 73-79 | Pulley Idler |
| 40 | 873 90 06-00 | Nut, Lock Flg. 3/8-16 unc |
| 55 | 532 43 71-10 | Arm, Idler |
| 56 | 532 19 90-92 | Spacer, Retainer |
| 57 | 817 00 06-16 | Screw 3/8-16 x 1 |
| 59 | 532 14 10-43 | Guard, Tuv Idler |
| 62 | 872 11 06-16 | Bolt RDHD 3/8-16 unc x 2 |
| 68 | 532 14 49-59 | V-Belt |
| 69 | 872 14 05-05 | Bolt |
| 111 | 532 40 47-84 | Bracket Wheel Gauge LH |
| 112 | 532 40 47-85 | Bracket Wheel Gauge RH |
| 113 | 817 00 05-10 | Bolt 5/16-18 Hex |
| 116 | 532 12 48-42 | Bolt, Shoulder |
| 117 | 532 18 86-06 | Wheel, Gauge |
| 119 | 819 12 14-14 | Washer 3/8 x 7/8 x 14 Ga. |
| 145 | 532 19 31-97 | Pulley, Idler, Primary |
| 188 | 532 19 51-61 | Stud Fastener |
| 189 | 873 90 05-00 | Nut Lock Hex Flange |
| 190 | 532 19 72-51 | Spring Mower Drive Electric |
| 208 | 817 67 06-08 | Screw 3/8-16 x 1/2 |
| - - | 587 25 33-01 | Mandrel Assembly (Includes housing (key #14), shaft assembly (key #13), and bearing (key #15) only - pulley/nut/washer and blade bolt/washers not included) |
| - - | 585 81 15-01 | Replacement Mower, Complete |

**NOTE:** All component dimensions given in U.S. inches
1 inch = 25.4 mm

## TRACTOR - - MODEL NO. LT2742 A2 (96041025200), PRODUCT NO. 960 41 02-52
### MOWER LIFT 45

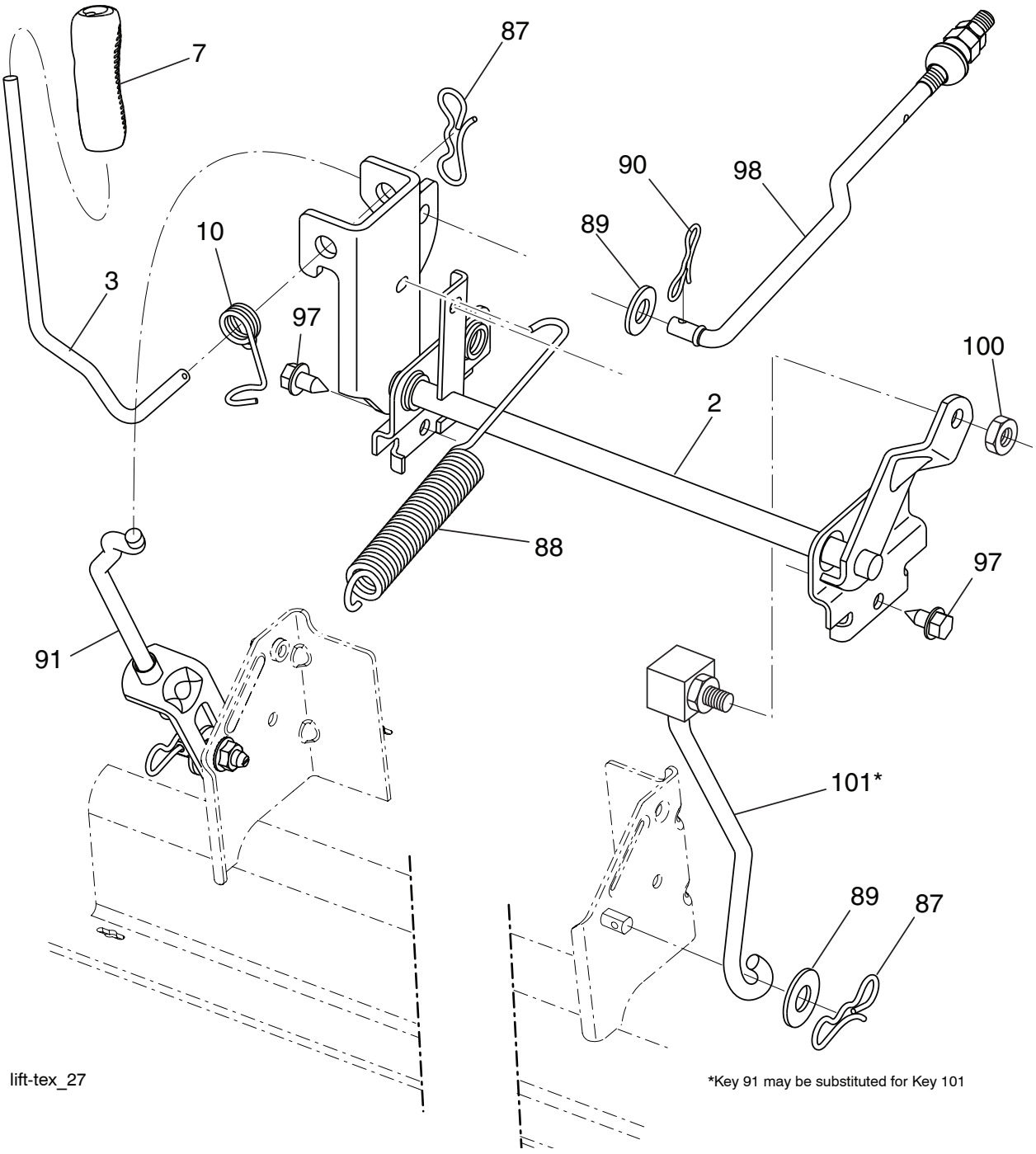


| KEY NO. | PART NO. | DESCRIPTION |
|---|---|---|
| 2 | 532 42 20-27 | Shaft Asm., Lift |
| 3 | 532 19 52-31 | Lever Asm., Lift |
| 7 | 580 96 23-01 | Grip, Lever |
| 10 | 532 19 63-14 | Spring Torsion |
| 87 | 532 19 42-09 | Pin Cotter 7/16 Bow Tie Lock |
| 88 | 532 41 07-10 | Spring Lift Assist |
| 89 | 819 19 19-12 | Washer Clear Zinc |
| 90 | 532 19 42-08 | Pin Cotter 5/16 Bow Tie Lock |
| 91 | 532 19 51-81 | Link Lift Susp Mower Rear |
| 97 | 817 00 06-12 | Screw 3/8-16 x .75 Smgml Tap/R.Z |
| 98 | 532 19 52-70 | Link Lift Susp. Front Mower |
| 100 | 873 93 06-00 | Nut Centerlock 3/8-16 unc |
| 101 | 532 40 70-03 | Link Asm. Lift Fixed |

**NOTE:** All component dimensions given in U.S. inches
1 inch = 25.4 mm

# TRACTOR - - MODEL NO. LT2742 A2 (96041025200), PRODUCT NO. 960 41 02-52

## SEAT ASSEMBLY 42

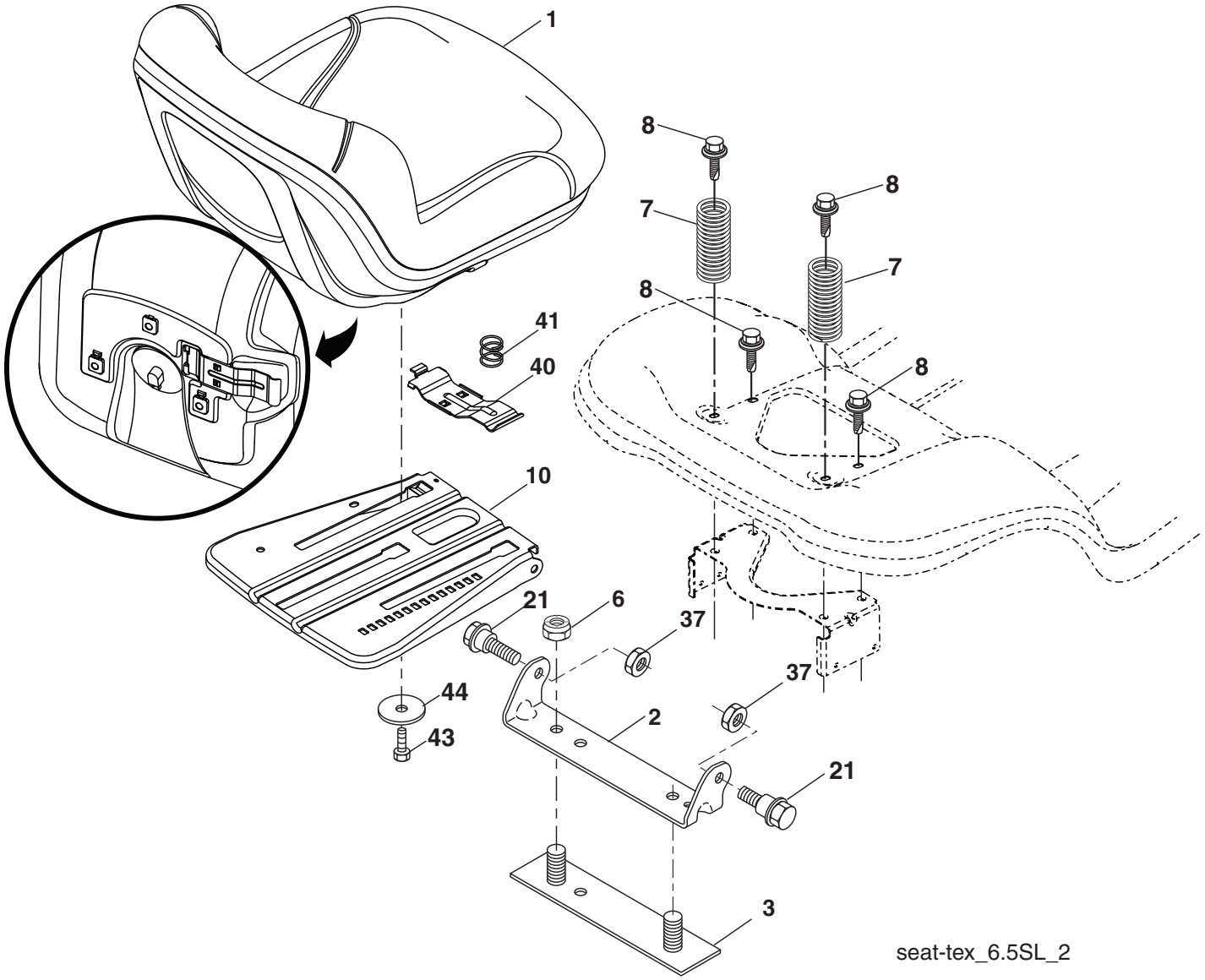


| KEY NO. | PART NO. | DESCRIPTION |
|---|---|---|
| 1 | 532 40 66-25 | Seat |
| 2 | 532 18 01-66 | Bracket Pivot Fender |
| 3 | 532 14 06-75 | Strap, Asm Fender |
| 6 | 873 80 06-00 | Nut, Lock w/Ins. 3/8-16 unc |
| 7 | 532 12 41-81 | Spring, Seat Cprsn |
| 8 | 532 17 18-77 | Bolt 5/16-18 unc x 3/4 w/Sems |
| 10 | 532 19 69-77 | Pan, Seat |
| 21 | 532 17 18-52 | Bolt, Shoulder 5/16-18 |

| KEY NO. | PART NO. | DESCRIPTION |
|---|---|---|
| 37 | 873 80 05-00 | Nut, Lock 5/16-18 unc |
| 40 | 532 19 76-61 | Handle Slide Seat |
| 41 | 532 19 82-00 | Spring Latch Seat |
| 43 | 874 76 06-12 | Bolt 3/8-16 x 3/4 |
| 44 | 819 13 38-12 | Washer 13/32 x 2-3/8 x 12 Ga. |

**NOTE:** All component dimensions given in U.S. inches
1 inch = 25.4 mm