ILLUSTRATED PARTS LIST

MODEL NUMBER **ST 2376 EP**
PRODUCT NUMBER 961 91 00-93
MFG. ID. NUMBER 96191009301

588 54 89-27 Rev. 1

SNOW THROWER - MODEL NO. ST 2376 EP (96191009301), PRODUCT NO. 961 91 00-93

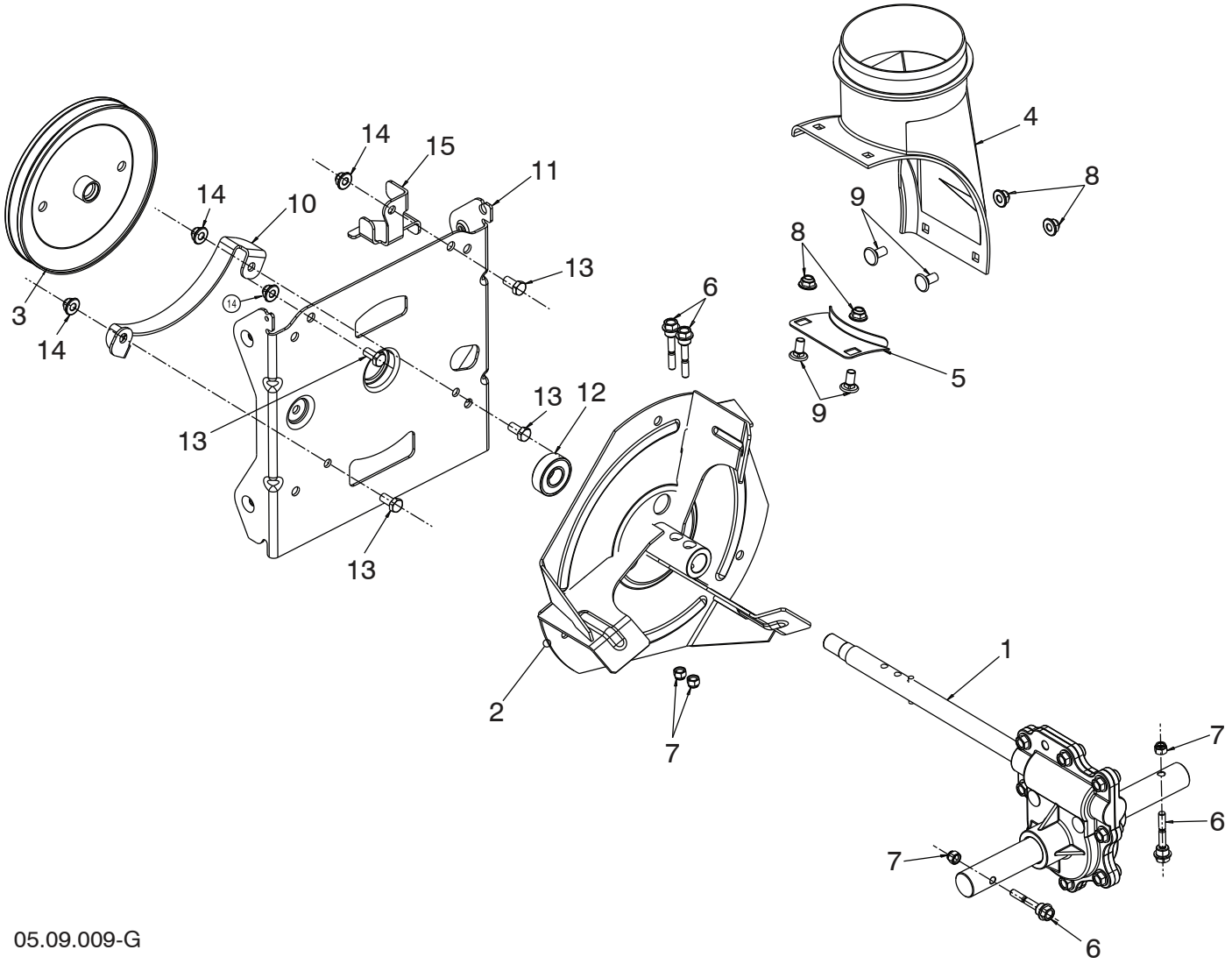

05.09.009-G

NOTE: All component dimensions given in U.S. inches. 1 inch = 25.4 mm
IMPORTANT: Use only Original Equipment Manufacturer (O.E.M.) replacement parts.
Failure to do so could be hazardous, damage your snow thrower and void your warranty.

KEY NO.	PART NO.	DESCRIPTION
1	586 71 48-01	GEARBOX AUGER
2	586 60 72-02	IMPELLER STEEL
3	587 40 24-01	PULLEY IMPELLER – SCREW ON
4	585 05 69-01	CHUTE DISCHARGE BASE
5	532 18 40-95	BRACKET CORNER DISCHARGE BASE
6	588 07 75-01	BOLT SHEAR 1/4-20
7	873 80 04-00	NUT NYLOCK 1/4-20
8	585 69 13-01	NUT FLANGE NYLOCK 5/16-18 BLK
9	585 69 12-01	BOLT CARRIAGE WAFER HEAD 5/16-18 X 5/8 BLK
10	581 63 20-02	BRACKET BELT KEEPER LOWER
11	581 59 25-02	BRACKET INTERFACE
12	532 19 87-91	BEARING BALL
13	532 16 31-83	SCREW HEX HEAD 5/16-18 X 5/8
14	532 42 79-42	NUT FLANGE NYLOCK 5/16-18
15	587 58 72-02	LOWER AUGER BELT GUIDE

NOTE: All component dimensions given in U.S. inches. 1 inch = 25.4 mm
IMPORTANT: Use only Original Equipment Manufacturer (O.E.M.) replacement parts. Failure to do so could be hazardous, damage your snow thrower and void your warranty.

SNOW THROWER - MODEL NO. ST 2376 EP (96191009301), PRODUCT NO. 961 91 00-93

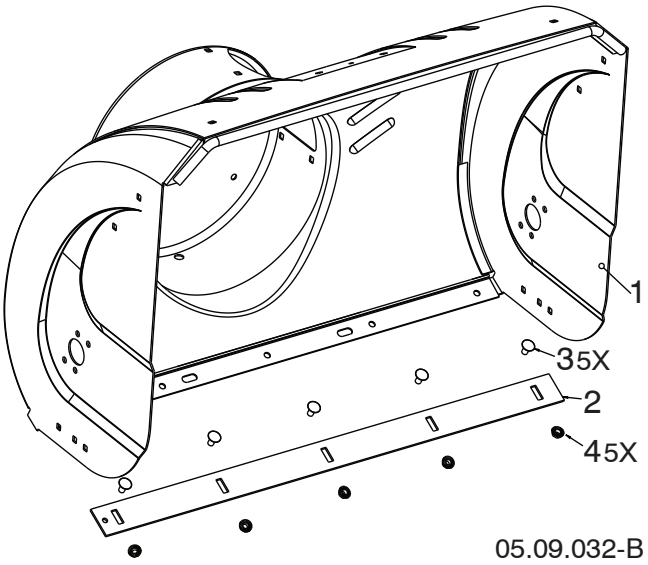

05.09.032-B

KEY NO.	PART NO.	DESCRIPTION
1	586 18 41-07	AUGER HOUSING
2	532 41 62-70	SCRAPER BAR
3	872 27 05-05	CARRIAGE BOLT 5/16-18 X .625 GR5
4	532 15 53-77	NUT 5/16-18

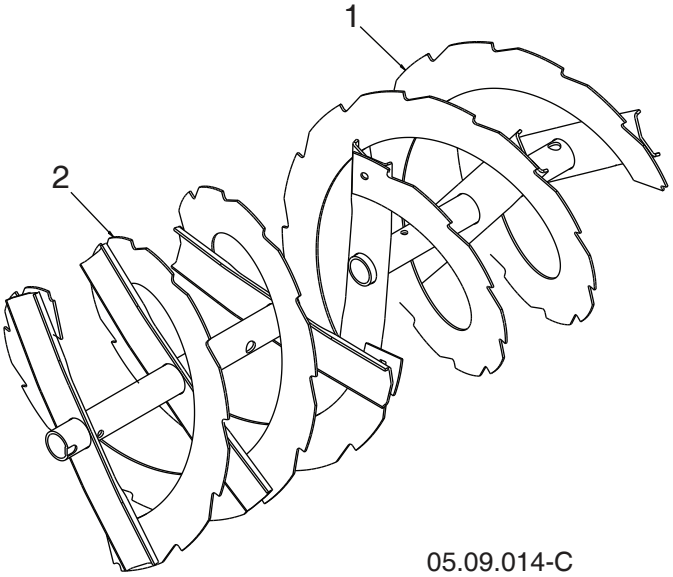

05.09.014-C

KEY NO.	PART NO.	DESCRIPTION
1	588 62 03-03	AUGER ASSEMBLY 30 LH
2	588 62 02-03	AUGER ASSEMBLY 30 RH

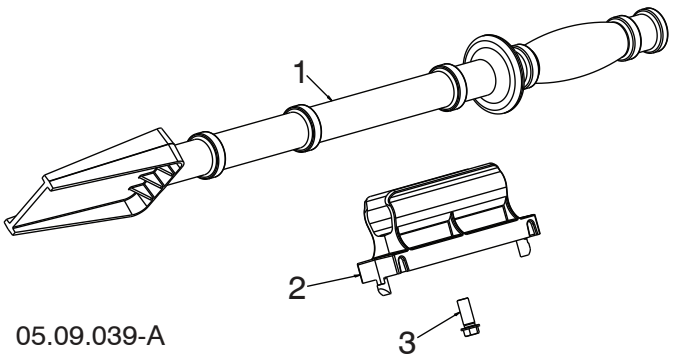

05.09.039-A

KEY NO.	PART NO.	DESCRIPTION
1	532 19 21-99	TOOL CLEANOUT
2	532 40 54-00	CLIP CLEANOUT TOOL
3	532 19 41-89	SCREW HEX WASHER 13-16 X 5/8

NOTE: All component dimensions given in U.S. inches. 1 inch = 25.4 mm
IMPORTANT: Use only Original Equipment Manufacturer (O.E.M.) replacement parts.
Failure to do so could be hazardous, damage your snow thrower and void your warranty.

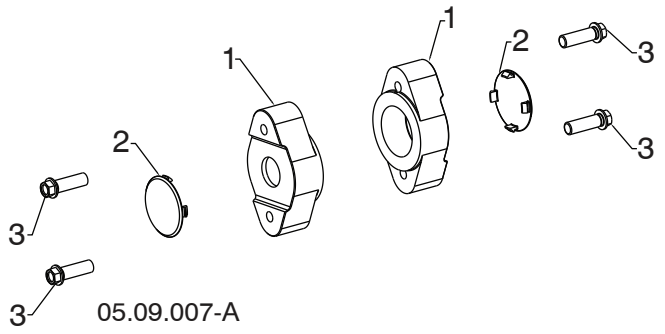

KEY NO.	PART NO.	DESCRIPTION
1	532 42 04-78	AUGER BEARING
2	532 41 19-39	BEARING PLUG
3	584 29 94-01	SCREW HI-LO WASHD 5/16-14 X 1.00

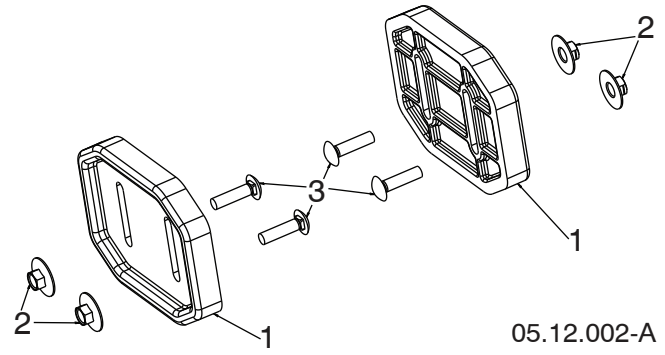

KEY NO.	PART NO.	DESCRIPTION
1	532 43 59-51	PLATE SKID PLASTIC HDPE
2	585 80 28-01	NUT LARGE FLANGE 5/16-18 – BLK
3	585 80 29-01	BOLT CARRIAGE 5/16-18 X 1.25 – BLK

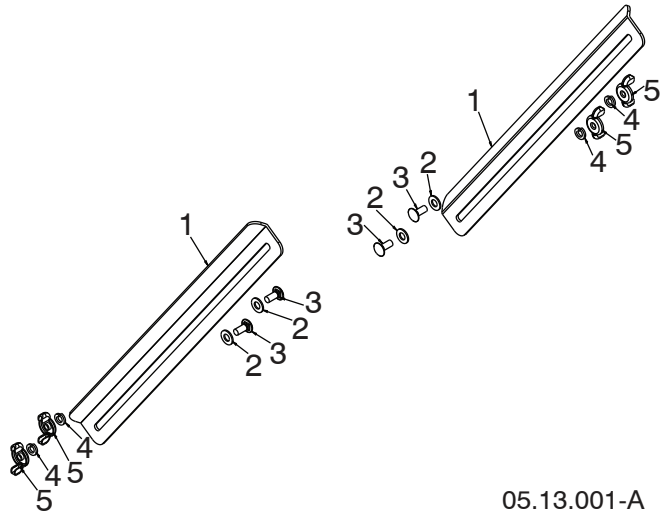

KEY NO.	PART NO.	DESCRIPTION
1	532 18 47-47	DRIFT BAR CUTTER
2	532 17 92-46	WASHER FRICTION NYLON
3	872 27 05-06	CARRIAGE BOLT 5/16-18 X .75 GR5
4	810 04 05-00	LOCKWASHER 5/16 SPLIT
5	532 12 86-38	WING NUT 5/16-18 ZINC

NOTE: All component dimensions given in U.S. inches. 1 inch = 25.4 mm
IMPORTANT: Use only Original Equipment Manufacturer (O.E.M.) replacement parts.
Failure to do so could be hazardous, damage your snow thrower and void your warranty.

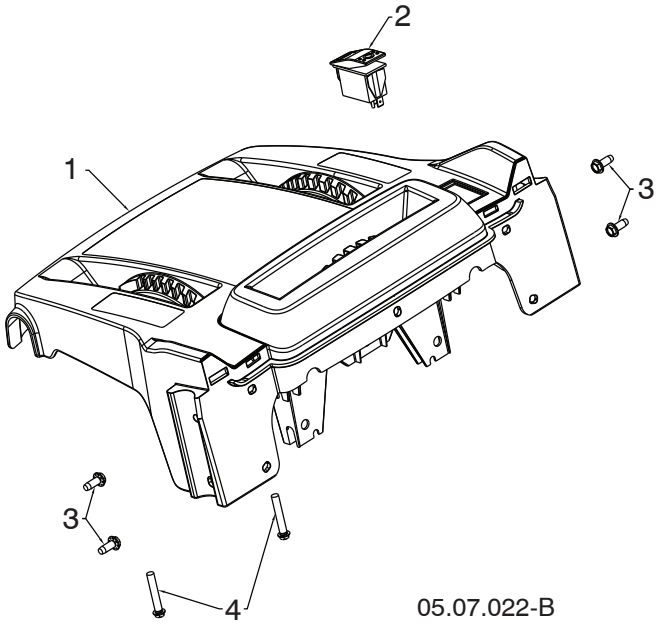

KEY NO.	PART NO.	DESCRIPTION
1	581 13 12-07	CONSOLE BASE MULTICONT W/SWITCH
2	585 80 50-01	SWITCH GRIP HEATED BLACK
3	817 06 04-10	SCREW TA SEMI GIMLE 1/4-20 X .62
4	581 32 95-01	SCREW HEX WASHER 13-16 X 1.50

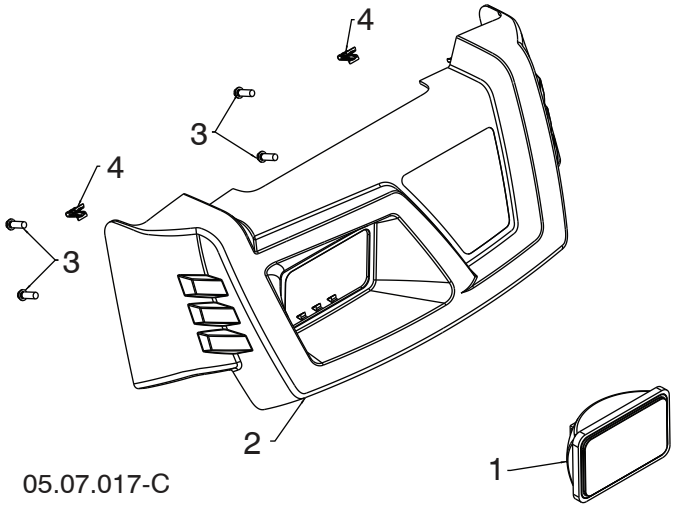

KEY NO.	PART NO.	DESCRIPTION
1	586 18 10-01	FLOOD HEADLIGHT
2	581 12 81-07	CONSOLE COVER JONSERED
3	532 19 41-89	SCREW HI-LO 13-16 X 5/8
4	581 92 87-01	PANEL CLIP
- -	532 18 37-84	BULB (NOT SHOWN)

NOTE: All component dimensions given in U.S. inches. 1 inch = 25.4 mm
IMPORTANT: Use only Original Equipment Manufacturer (O.E.M.) replacement parts.
Failure to do so could be hazardous, damage your snow thrower and void your warranty.

SNOW THROWER - MODEL NO. ST 2376 EP (96191009301), PRODUCT NO. 961 91 00-93

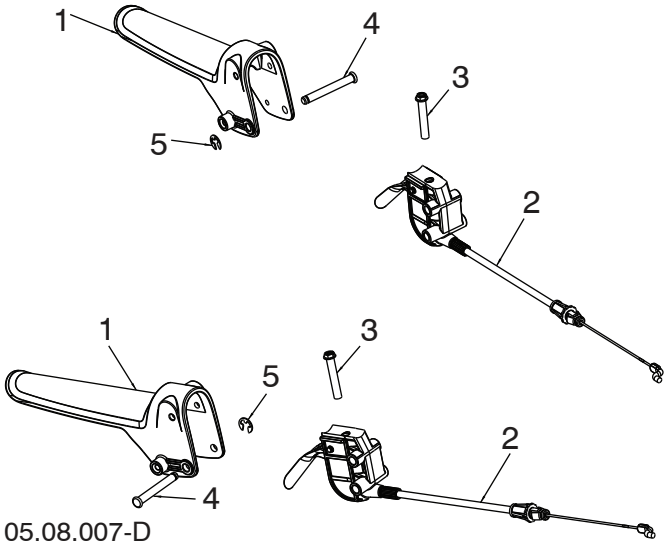

05.08.007-D

KEY NO.	PART NO.	DESCRIPTION
1	587 46 30-01	LEVER CONTROL DSST OPP MPP
2	581 20 82-01	CONTROL UNIT ASM LEVER PIVOT
3	585 69 07-01	SCREW HEXHD 10-24 X 1.50
4	532 43 17-62	GROOVED PIN
5	812 00 00-14	E-RING

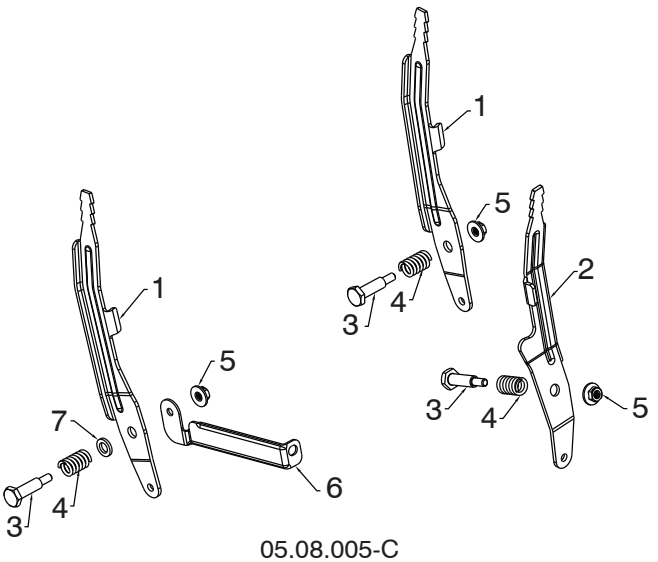

05.08.005-C

KEY NO.	PART NO.	DESCRIPTION
1	581 12 39-02	LEVER CONTROL SPEED/DEFL
2	581 24 16-02	LEVER CONTROL CHUTE ROT
3	581 32 97-01	BOLT SHOULDER 1/4-20
4	581 32 96-01	SPRING COMPRESSION
5	586 66 89-01	NUT FL LOCK 1/4-20
6	584 46 84-02	BRACE SUPPORT SPEED
7	587 03 13-01	WASHER .625 X .375 X .094 NYLON 6/6

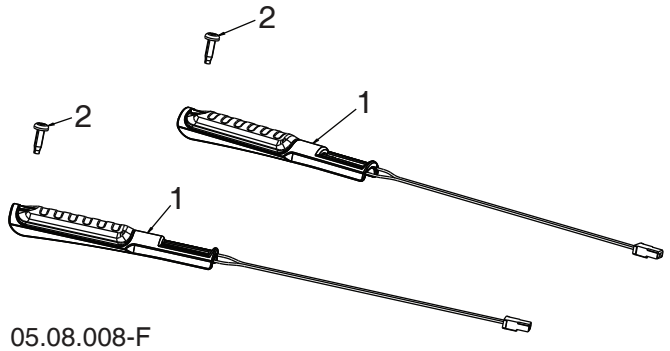

05.08.008-F

KEY NO.	PART NO.	DESCRIPTION
1	588 77 59-01	GRIP HANDLE HEATED
2	532 44 22-50	SCREW PAN HD TORX 1/4-20 X .75

NOTE: All component dimensions given in U.S. inches. 1 inch = 25.4 mm
IMPORTANT: Use only Original Equipment Manufacturer (O.E.M.) replacement parts.
Failure to do so could be hazardous, damage your snow thrower and void your warranty.

SNOW THROWER - MODEL NO. ST 2376 EP (96191009301), PRODUCT NO. 961 91 00-93

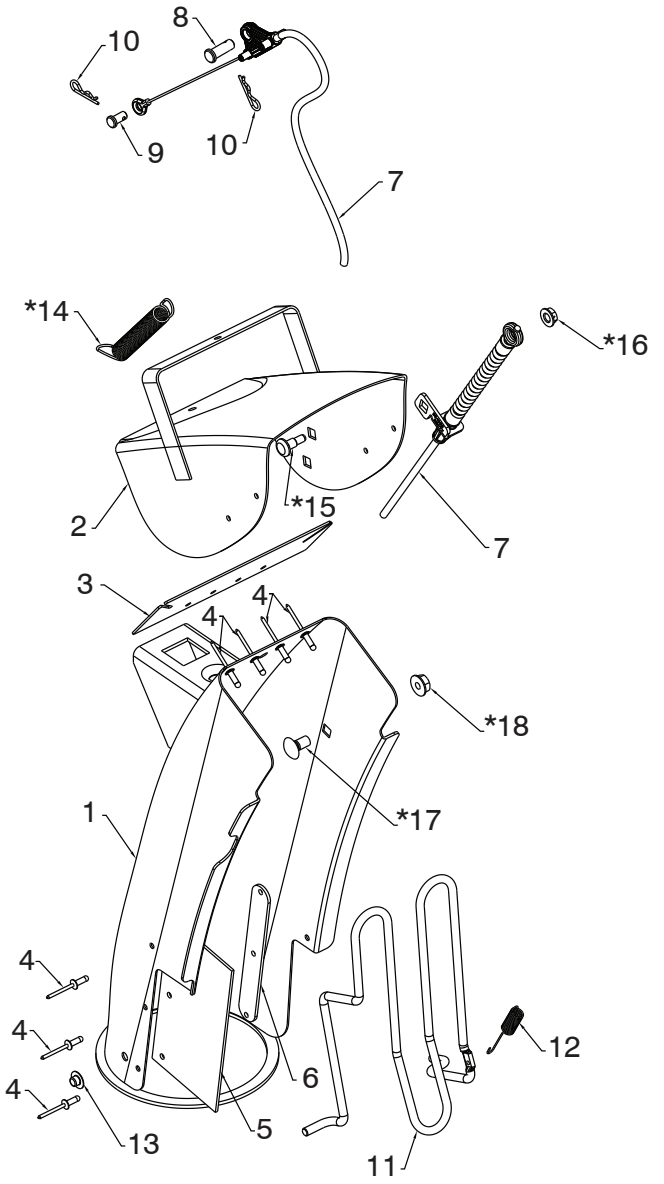

05.11.008-D

KEY NO.	PART NO.	DESCRIPTION
1	588 07 78-04	CHUTE WELDMENT ASSEMBLY (INCLUDES 1-6)
2	- - - - - - - - -	DEFLECTOR WELDMENT
3	- - - - - - - - -	DEFLECTOR SEAL
4	- - - - - - - - -	POP RIVET
5	- - - - - - - - -	CHUTE SNOW SHIELD
6	- - - - - - - - -	SHIELD STRAP RETAINER
7	586 96 15-01	CABLE ASM DEFLECTOR - BOWDEN
8	581 32 94-01	PIN CLEVIS 5/16 X .875
9	585 80 83-01	PIN CLEVIS 1/4 X .312
10	532 42 33-03	HAIRPIN RETAINER
11	532 43 55-82	CHUTE GUARD
12	532 43 56-16	GUARD RETURN SPRING
13	532 05 93-49	PUSH NUT
*14	532 18 45-05	DEFLECTOR SPRING
*15	585 83 22-01	SHOULDER BOLT 1/4-20 X .375
*16	585 69 14-01	NUT 1/4-20
*17	585 83 20-01	CARRIAGE BOLT 3/8-16 X .625
*18	873 97 05-00	NUT 5/16-18

NOTE: ALL ITEMS MARKED WITH AN * ARE PROVIDED IN THE BAG OF ITEMS SHIPPED LOOSE WITH THE PRODUCT

NOTE: All component dimensions given in U.S. inches. 1 inch = 25.4 mm
IMPORTANT: Use only Original Equipment Manufacturer (O.E.M.) replacement parts. Failure to do so could be hazardous, damage your snow thrower and void your warranty.

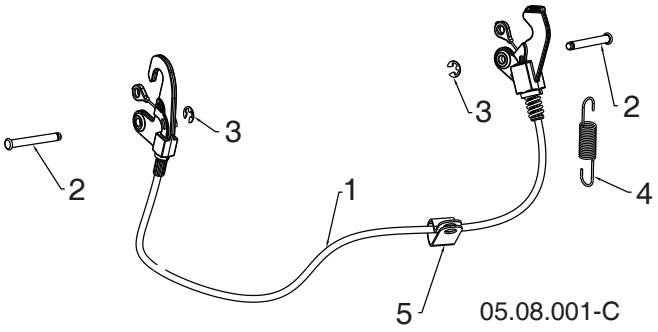

KEY NO.	PART NO.	DESCRIPTION
1	587 33 25-02	CABLE INTERLOCK
2	532 43 17-62	PIN GROOVED
3	812 00 00-14	E-RING
4	581 15 12-01	SPRING RETURN
5	532 19 79-91	CLIP CABLE BLACK

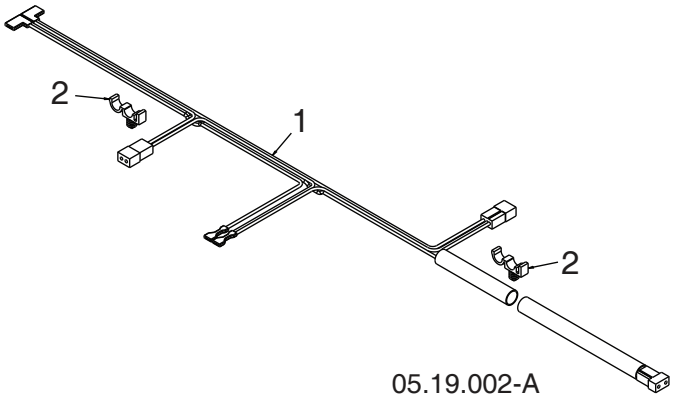

KEY NO.	PART NO.	DESCRIPTION
1	587 53 57-01	HARNESS WIRE LIGHTS & GRIPS
2	532 14 50-06	WIRE RETAINER

NOTE: All component dimensions given in U.S. inches. 1 inch = 25.4 mm
IMPORTANT: Use only Original Equipment Manufacturer (O.E.M.) replacement parts. Failure to do so could be hazardous, damage your snow thrower and void your warranty.

SNOW THROWER - MODEL NO. ST 2376 EP (96191009301), PRODUCT NO. 961 91 00-93

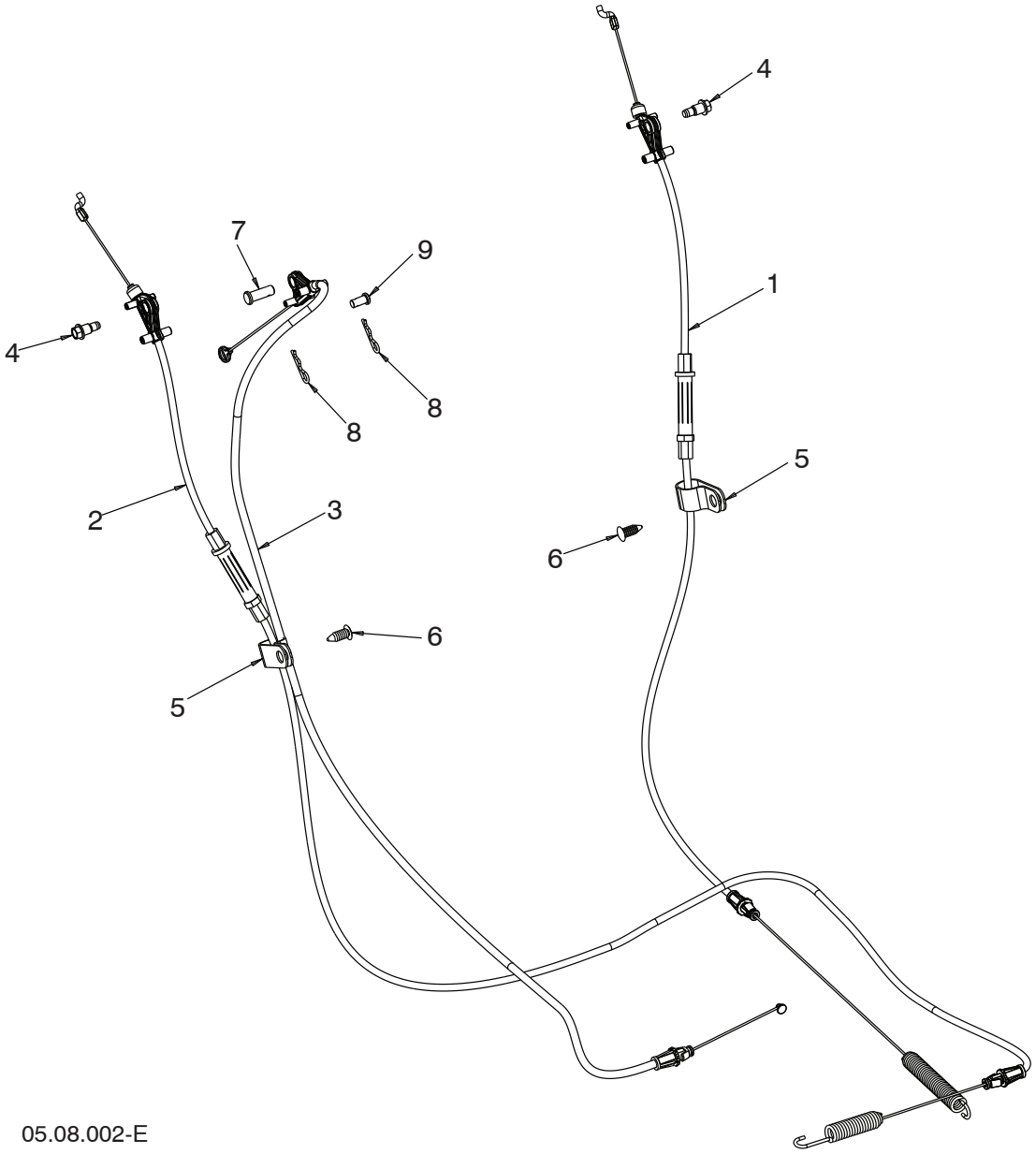

05.08.002-E

KEY NO.	PART NO.	DESCRIPTION
1	587 64 18-01	CABLE CONTROL DRIVE
2	587 42 87-01	CABLE CONTROL AUGER
3	588 12 23-01	CABLE CONTROL SPEED
4	581 72 61-01	BOLT SHOULDER 1/4
5	532 19 79-91	CLIP CABLE
6	532 42 81-24	FASTENER PUSH .250
7	581 32 94-01	PIN CLEVIS 5/16
8	532 42 33-03	HAIRPIN
9	585 80 83-01	PIN CLEVIS 1/4

NOTE: All component dimensions given in U.S. inches. 1 inch = 25.4 mm
IMPORTANT: Use only Original Equipment Manufacturer (O.E.M.) replacement parts. Failure to do so could be hazardous, damage your snow thrower and void your warranty.

SNOW THROWER - MODEL NO. **ST 2376 EP** (96191009301), PRODUCT NO. 961 91 00-93

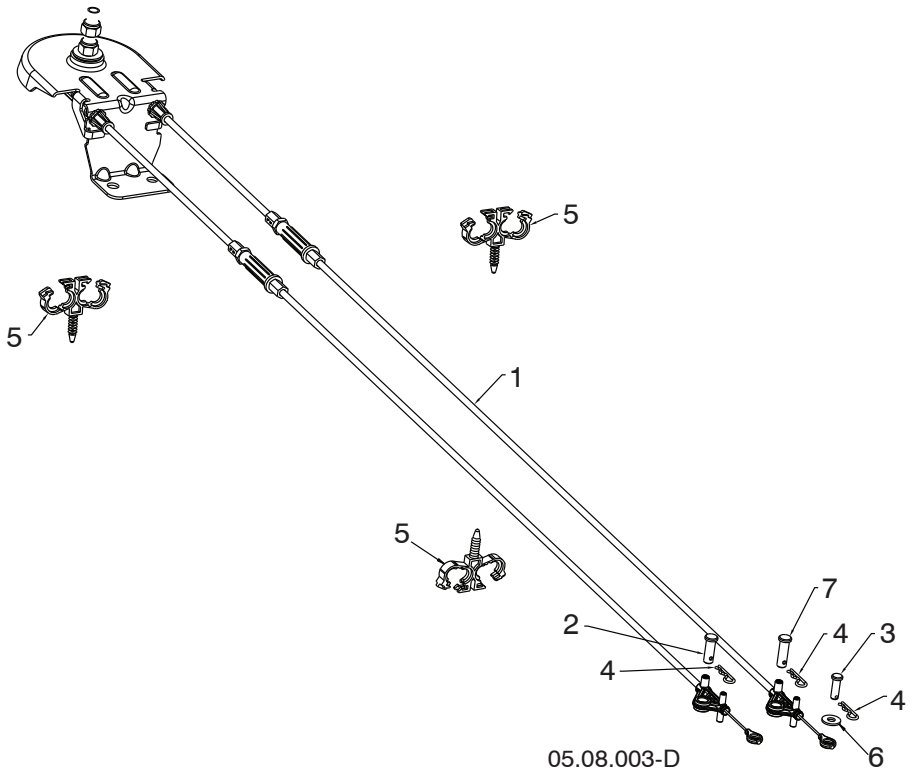

KEY NO.	PART NO.	DESCRIPTION
1	581 68 03-01	CABLE ROTATOR ASM
2	581 32 94-01	PIN CLEVIS 5/16 X 7/8
3	877 10 08-12	PIN CLEVIS 1/4 X 3/4
4	532 42 33-03	HAIRPIN SOFT ZINC
5	584 65 22-01	CLIP CONDUIT DOUBLE
6	586 68 21-01	WASHER
7	587 13 08-01	PIN CLEVIS 5/16 X 1

NOTE: All component dimensions given in U.S. inches. 1 inch = 25.4 mm
IMPORTANT: Use only Original Equipment Manufacturer (O.E.M.) replacement parts. Failure to do so could be hazardous, damage your snow thrower and void your warranty.

SNOW THROWER - MODEL NO. ST 2376 EP (96191009301), PRODUCT NO. 961 91 00-93

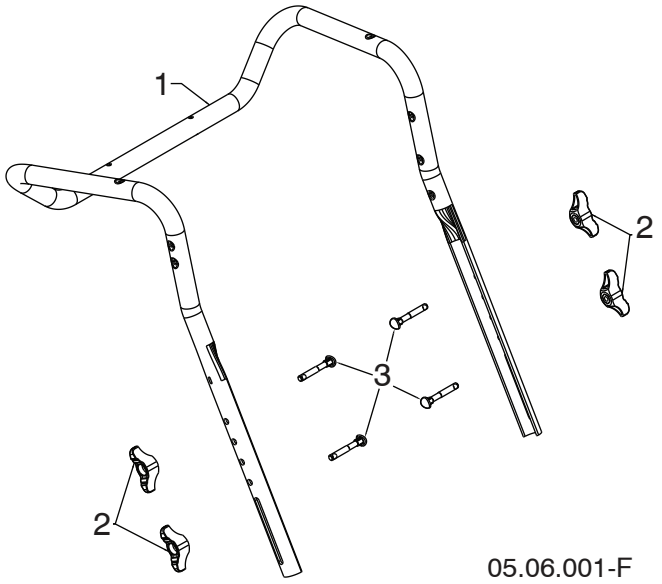

05.06.001-F

KEY NO.	PART NO.	DESCRIPTION
1	581 12 36-02	UPPER HANDLE
2	532 19 19-38	HANDLE KNOB STD BLACK
3	588 05 99-01	SCREW 5/16-18 X 2.25 CONCAVE HEAD WITH PATCH

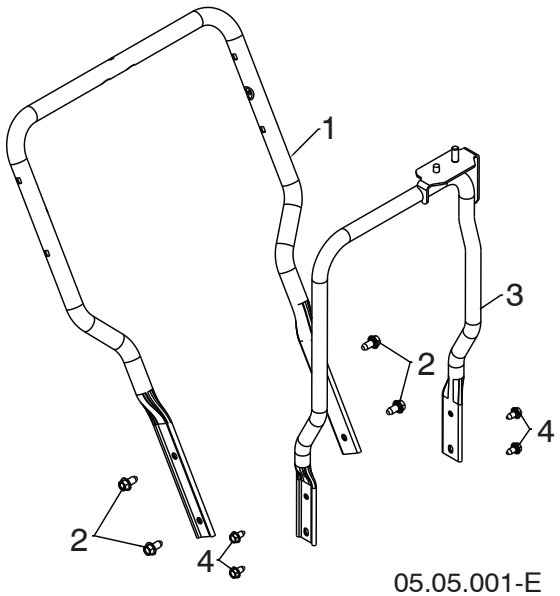

05.05.001-E

KEY NO.	PART NO.	DESCRIPTION
1	588 67 21-02	LOWER HANDLE
2	817 00 06-12	SCREW HEX WASH HD 3/8-16 X .75
3	581 62 20-02	CHUTE ROTATOR SUPPORT ASM
4	817 00 05-10	BOLT HEX 5/16-18

NOTE: All component dimensions given in U.S. inches. 1 inch = 25.4 mm
IMPORTANT: Use only Original Equipment Manufacturer (O.E.M.) replacement parts.
Failure to do so could be hazardous, damage your snow thrower and void your warranty.

SNOW THROWER - MODEL NO. **ST 2376 EP** (96191009301), PRODUCT NO. 961 91 00-93

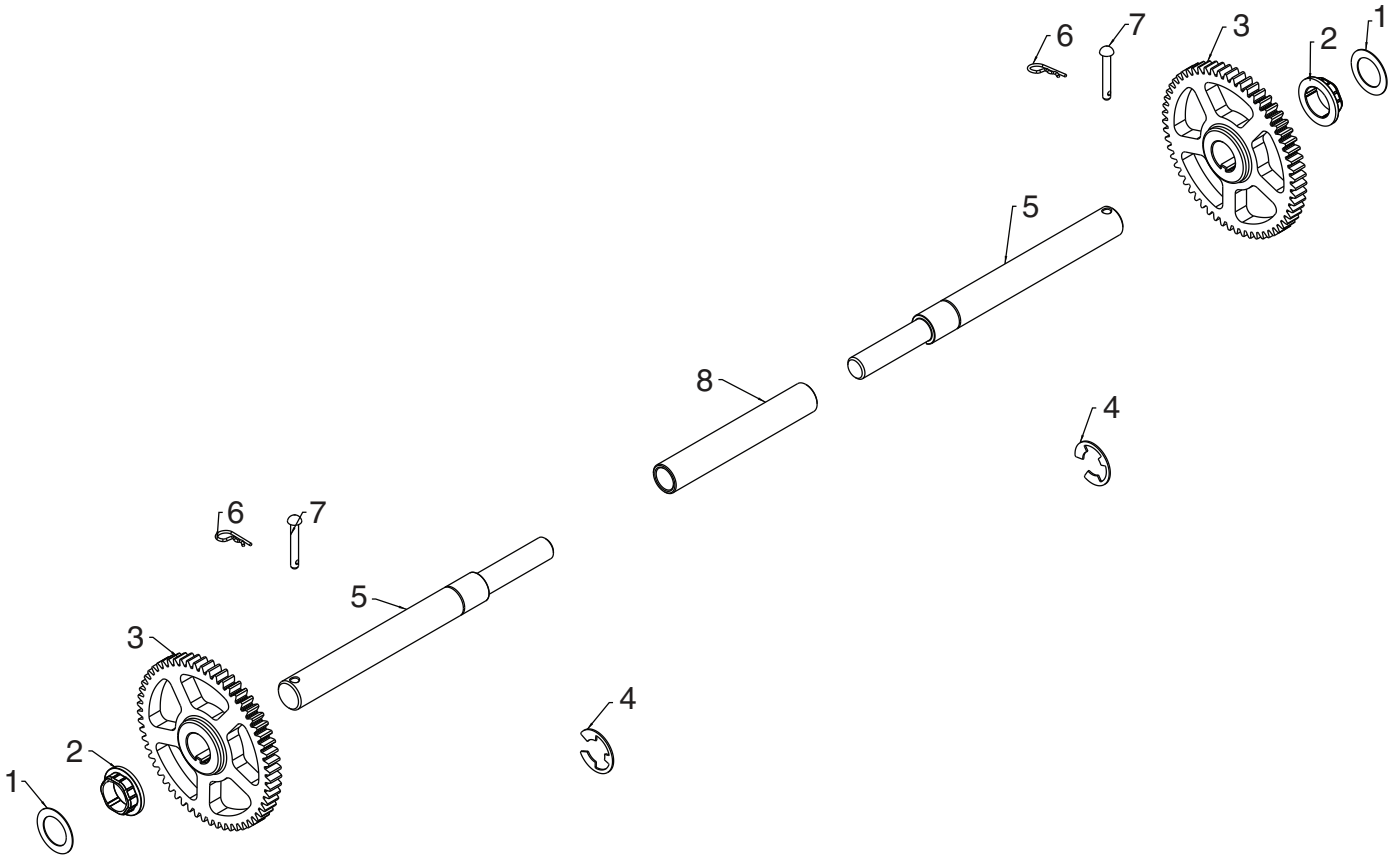

05.03.002-B

KEY NO.	PART NO.	DESCRIPTION
1	532 44 49-49	WASHER 1.00
2	587 97 89-01	BUSHING HEX 1 SHAFT
3	588 51 86-01	GEAR 59T DRIVEN
4	812 00 00-53	RETAINING RING
5	580 75 26-01	AXLE SHAFT SPLIT
6	532 12 47-88	RETAINER SPRING 1 ZINC
7	532 17 12-71	RIVET RD HD DRILLED 1/4 DIA
8	580 75 25-01	AXLE SLEEVE

NOTE: All component dimensions given in U.S. inches. 1 inch = 25.4 mm
IMPORTANT: Use only Original Equipment Manufacturer (O.E.M.) replacement parts. Failure to do so could be hazardous, damage your snow thrower and void your warranty.

SNOW THROWER - MODEL NO. ST 2376 EP (96191009301), PRODUCT NO. 961 91 00-93

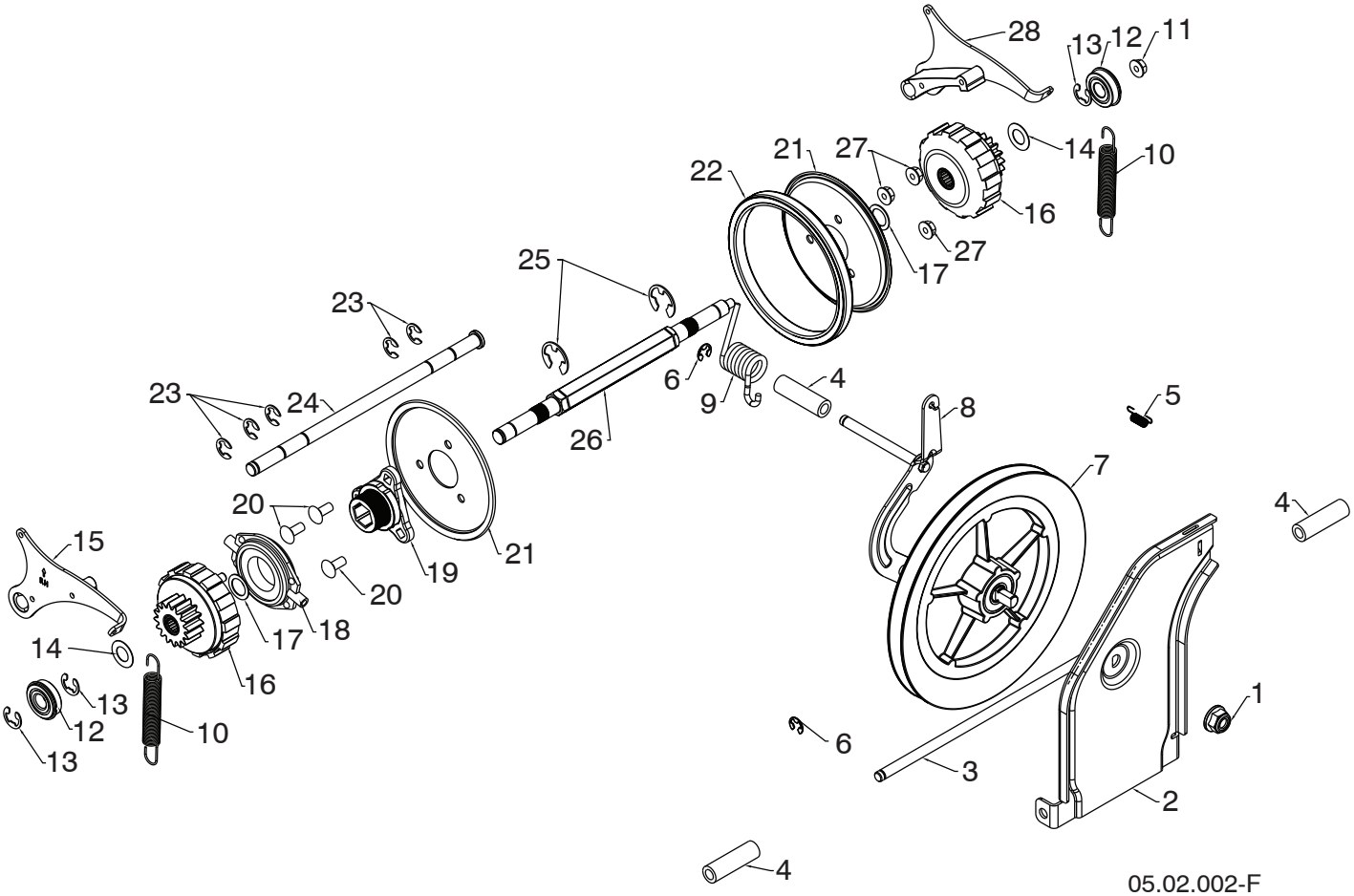

NOTE: All component dimensions given in U.S. inches. 1 inch = 25.4 mm
IMPORTANT: Use only Original Equipment Manufacturer (O.E.M.) replacement parts.
Failure to do so could be hazardous, damage your snow thrower and void your warranty.

KEY NO.	PART NO.	DESCRIPTION
1	521 99 11-01	NUT HEX FLANGE LK 1/2-13
2	587 70 34-02	SWING PLATE FRICTION PULL
3	581 12 30-01	ROD TIP PLATE
4	581 73 27-01	SPACER DRIVE
5	532 19 38-85	LATCH SPRING
6	812 00 00-07	E-RING RETAINER
7	581 32 84-01	FRICTION DISC COMBO PULLEY
8	587 19 34-03	BRACKET YOKE ASSEMBLY
9	581 31 53-01	SPRING TORSION DRIVE
10	585 26 38-01	EXTENSION SPRING
11	585 69 15-01	NUT HEX FLANGE LOCK 5/16-18
12	580 75 62-01	BEARING 9/16 I.D. 1622-2RSNR
13	580 75 61-01	RETAINING RING 1622-2RSNR
14	580 75 13-01	WASHER FLAT .59 I.D. X 1.065 X 25 GA
15	580 75 66-01	PAWL ASM RH
16	580 75 60-01	GEAR ASM PLANETARY
17	580 75 63-01	WASHER FLAT .6875 I.D. X 1.00 X 21 GA
18	532 17 53-44	TRUNNION BEARING ASM
19	581 09 09-01	HUB RUBBER WHEEL
20	872 11 05-06	BOLT CARRIAGE 5/16-18 X .75
21	581 09 10-02	PLATE RUBBER WHEEL
22	581 09 11-01	RING RUBBER WHEEL
23	586 64 43-01	E-RING
24	580 75 51-01	ROD PAWL
25	812 00 00-22	E-RING
26	580 75 24-01	SHAFT REDUCTION PWR STR
27	532 75 11-53	NUT HEX FLANGE LK 5/16-18
28	580 75 67-01	PAWL ASM LH

NOTE: All component dimensions given in U.S. inches. 1 inch = 25.4 mm
IMPORTANT: Use only Original Equipment Manufacturer (O.E.M.) replacement parts. Failure to do so could be hazardous, damage your snow thrower and void your warranty.

SNOW THROWER - MODEL NO. ST 2376 EP (96191009301), PRODUCT NO. 961 91 00-93

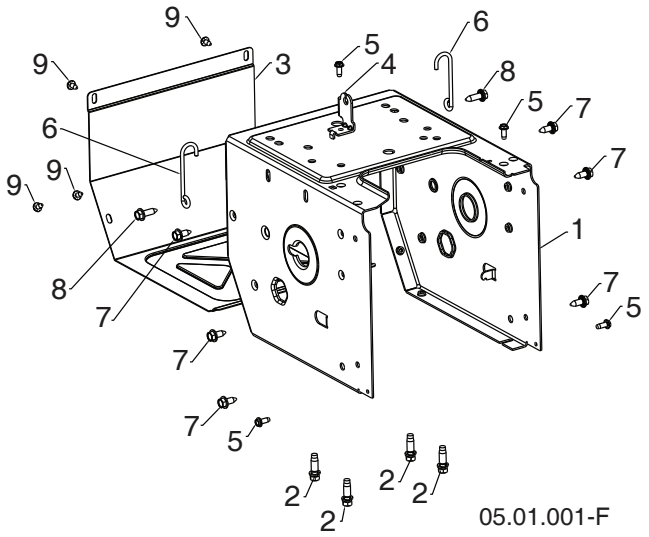

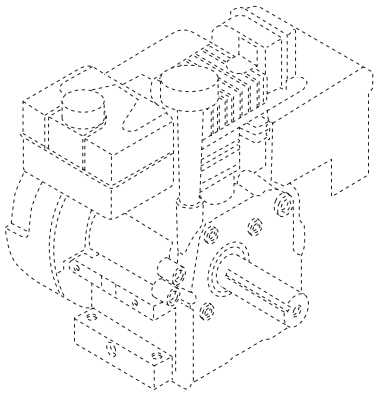

KEY NO.	PART NO.	DESCRIPTION
- -	580 42 61-05	COMPLETE LCT ENGINE PW2HK18850781DY
1	580 83 94-07	FRAME
2	532 15 04-06	ENGINE BOLT 3/8-16 X 1.280 DOGPOINT
3	580 83 95-07	FRAME COVER
4	501 06 04-03	SHIFTER BRACKET
5	817 06 04-10	SCREW HEX WASHER 1/4-20 X .625
6	585 20 60-01	WIREFORM SUPPORT CABLE
7	532 42 88-67	BOLT HEXHD WASHER 5/16-18 X .750
8	585 21 75-01	BOLT HEXHD WASHER 5/16-18 X 1.000
9	817 06 04-08	SCREW HEX WASHER 1/4-20 X .500

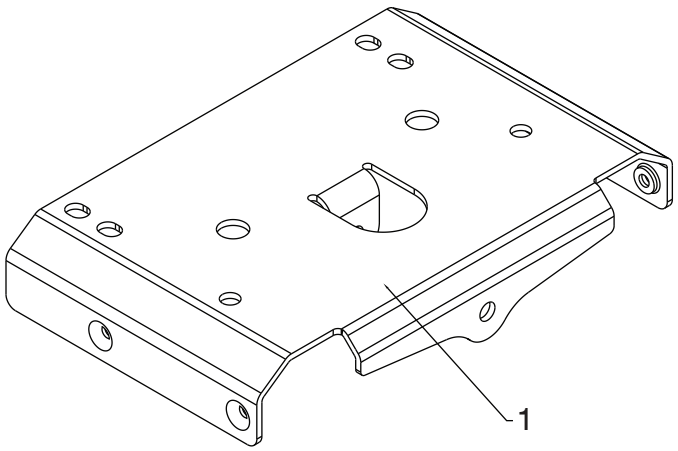

05.01.003-A

KEY NO.	PART NO.	DESCRIPTION
1	585 54 60-02	LARGE MOUNTING PLATE

NOTE: All component dimensions given in U.S. inches. 1 inch = 25.4 mm
IMPORTANT: Use only Original Equipment Manufacturer (O.E.M.) replacement parts.
Failure to do so could be hazardous, damage your snow thrower and void your warranty.

SNOW THROWER - MODEL NO. ST 2376 EP (96191009301), PRODUCT NO. 961 91 00-93

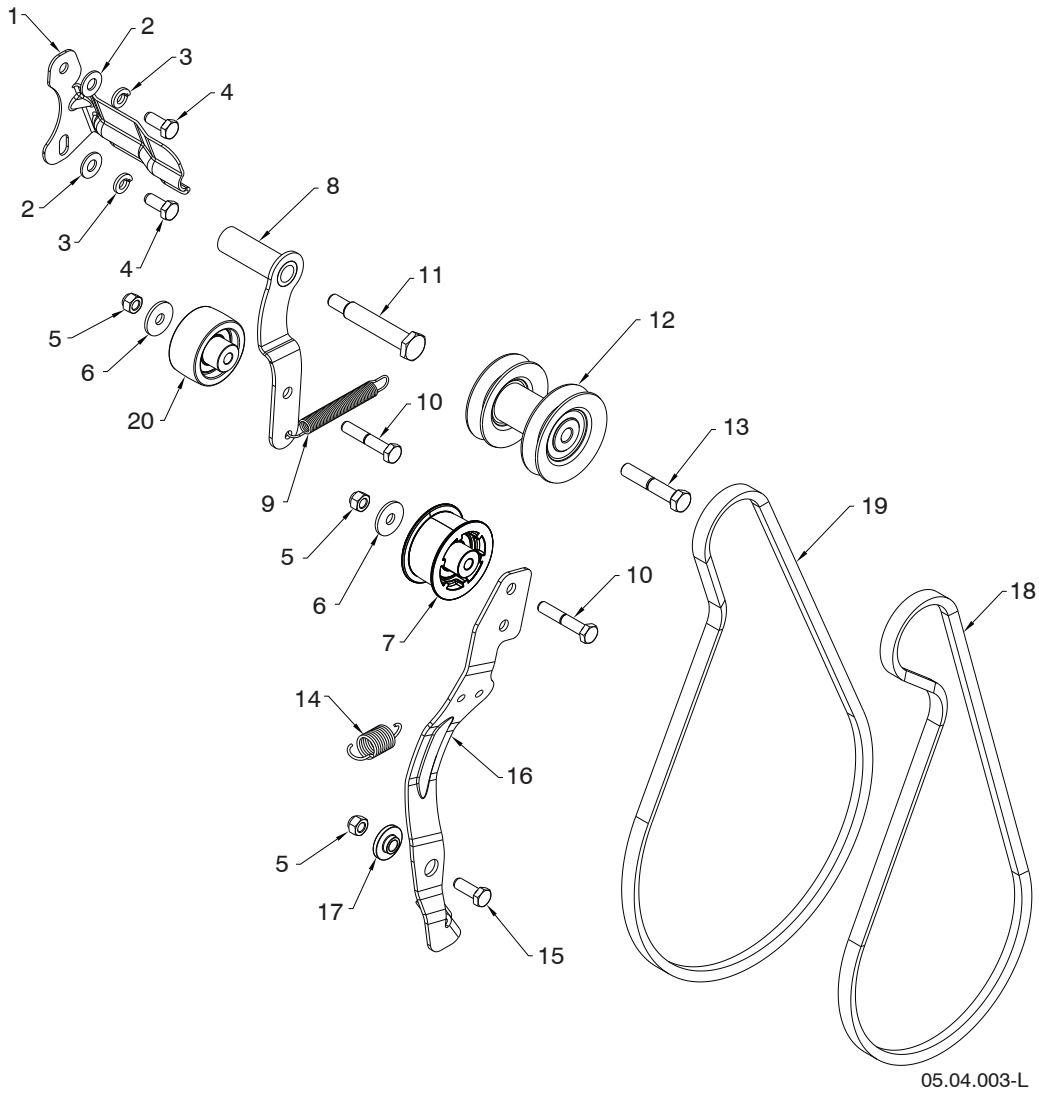

05.04.003-L

KEY NO.	PART NO.	DESCRIPTION
1	588 49 28-02	BELT KEEPER BRACKET
2	819 11 12-16	WASHER 11/32 X 3/4 X 16 GA
3	810 04 05-00	LOCKWASHER 5/16 SPLIT HVY
4	874 61 05-12	CAPSCREW HEXHD 5/16-24 X .75 GR 5
5	873 80 05-00	NUT NYLOCK 5/16-18
6	532 05 92-89	WASHER FLAT .328 X 1.00 X .097
7	581 14 14-01	IDLER PULLEY 2.0 W/SPACER
8	581 33 82-03	IDLER ARM WELDMENT DRIVE
9	580 75 30-01	RETURN SPRING IDLER ARM DRIVE
10	874 76 05-28	BOLT HEXHD 5/16-18 X 1.75
11	581 41 38-01	SHOULDER BOLT 5/16-24 X 2.15
12	587 89 37-03	PULLEY ASM ENGINE
13	532 17 96-17	BOLT HEXHD 3/8-24 GR8
14	587 03 12-01	RETURN SPRING IDLER ARM
15	874 76 05-14	BOLT HEXHD 5/16-18 X .875
16	580 83 11-04	IDLER ARM
17	587 34 37-01	IDLER BUSHING PIVOT
18	587 20 90-01	AUGER BELT HI CRANK
19	585 82 99-02	DRIVE BELT HI CRANK
20	586 88 02-01	PULLEY IDLER 2.0 FLANGELESS W/SPACE

NOTE: All component dimensions given in U.S. inches. 1 inch = 25.4 mm
IMPORTANT: Use only Original Equipment Manufacturer (O.E.M.) replacement parts.
Failure to do so could be hazardous, damage your snow thrower and void your warranty.

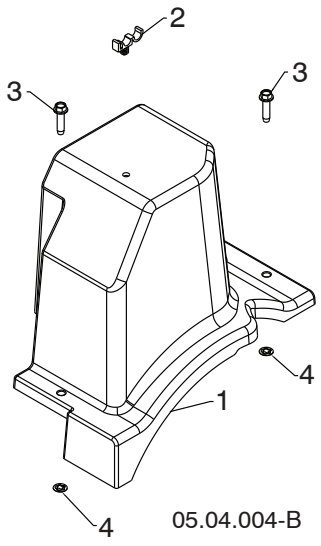

05.04.004-B

KEY NO.	PART NO.	DESCRIPTION
1	587 10 55-01	BELT COVER HI CRANK
2	532 14 50-06	CABLE GUIDE
3	- - - - - - - -	BOLT HEX WSH THDRL 1/4-20 X 1
4	- - - - - - - -	PALNUT 1/4 IN

NOTE: All component dimensions given in U.S. inches. 1 inch = 25.4 mm
IMPORTANT: Use only Original Equipment Manufacturer (O.E.M.) replacement parts. Failure to do so could be hazardous, damage your snow thrower and void your warranty.

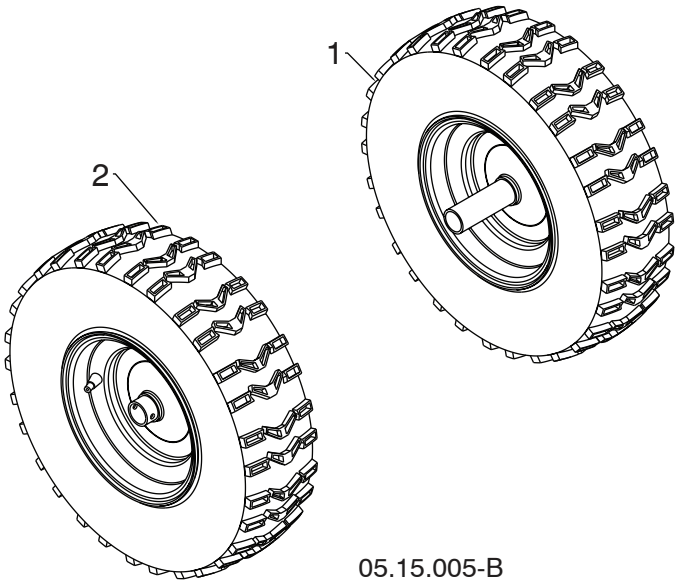

05.15.005-B

KEY NO.	PART NO.	DESCRIPTION
1	532 43 57-86	WHEEL 16X4.80 NPS LH 1.00 K478
2	532 43 57-88	WHEEL 16X4.80 NPS RH 1.00 K478

NOTE: All component dimensions given in U.S. inches. 1 inch = 25.4 mm
IMPORTANT: Use only Original Equipment Manufacturer (O.E.M.) replacement parts. Failure to do so could be hazardous, damage your snow thrower and void your warranty.

SNOW THROWER - MODEL NO. ST 2376 EP (96191009301), PRODUCT NO. 961 91 00-93

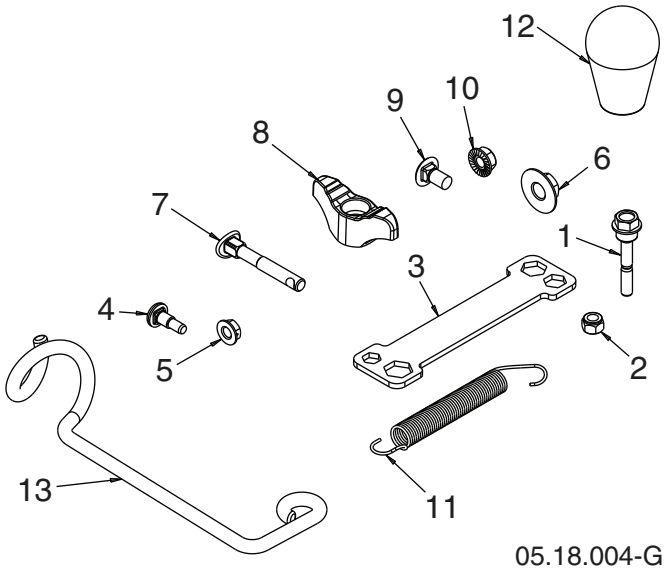

05.18.004-G

KEY NO.	PART NO.	DESCRIPTION
1	588 07 75-01	BOLT 1/4-20 X 1.81
2	873 80 04-00	NUT NYLOCK 1/4 - 20
3	532 42 91-12	WRENCH
4	585 83 22-01	BOLT SHOULDER
5	585 69 14-01	NUT HEX FL 1/4-20 CTR
6	585 69 10-01	NUT NYLOCK 3/8-16
7	588 05 99-01	BOLT 5/16 – 18 X 2.25 CONCAVE
8	532 19 19-38	KNOB 5/16-18 TWO-WING
9	585 83 20-01	BOLT 5/16 – 18 X .625
10	873 97 05-00	NUT SERR FL LOCK 5/16-18
11	532 18 45-05	SPRING DEFLECT CHUTE
12	581 69 75-01	KNOB SOFT TOUCH SLOTTED
13	581 89 73-01	SUPPORT ROTATION CABLE

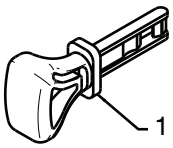

01.14.009-B

KEY NO.	PART NO.	DESCRIPTION
1	532 44 30-59	SAFETY IGNITION KEY KIT

NOTE: All component dimensions given in U.S. inches. 1 inch = 25.4 mm
IMPORTANT: Use only Original Equipment Manufacturer (O.E.M.) replacement parts.
Failure to do so could be hazardous, damage your snow thrower and void your warranty.

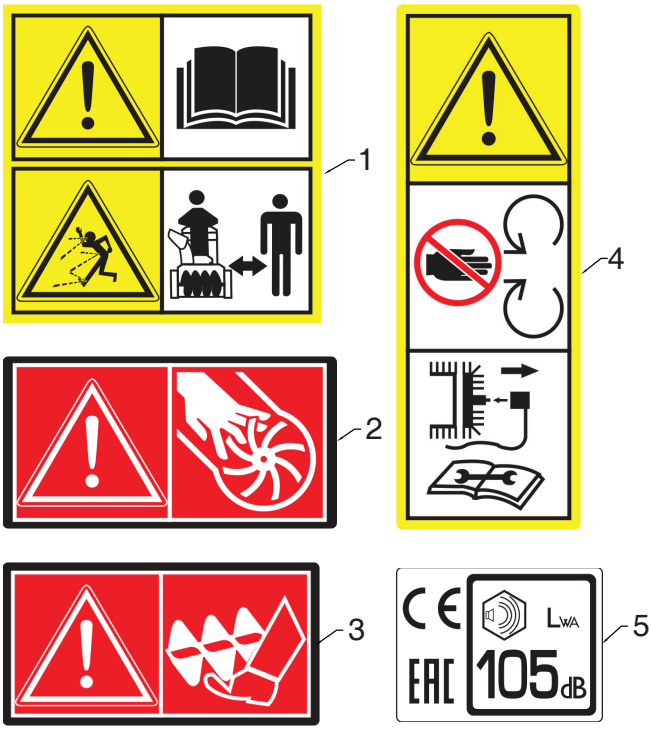

05.16.002-B

KEY NO.	PART NO.	DESCRIPTION
1	532 18 40-45	DECAL AUGER
2	532 19 96-82	DECAL CHUTE
3	532 19 96-83	DECAL AUGER SAFETY
4	532 18 40-28	DECAL BELT GUIDE
5	588 04 98-01	DECAL NOISE LEVEL

NOTE: All component dimensions given in U.S. inches. 1 inch = 25.4 mm
IMPORTANT: Use only Original Equipment Manufacturer (O.E.M.) replacement parts. Failure to do so could be hazardous, damage your snow thrower and void your warranty.

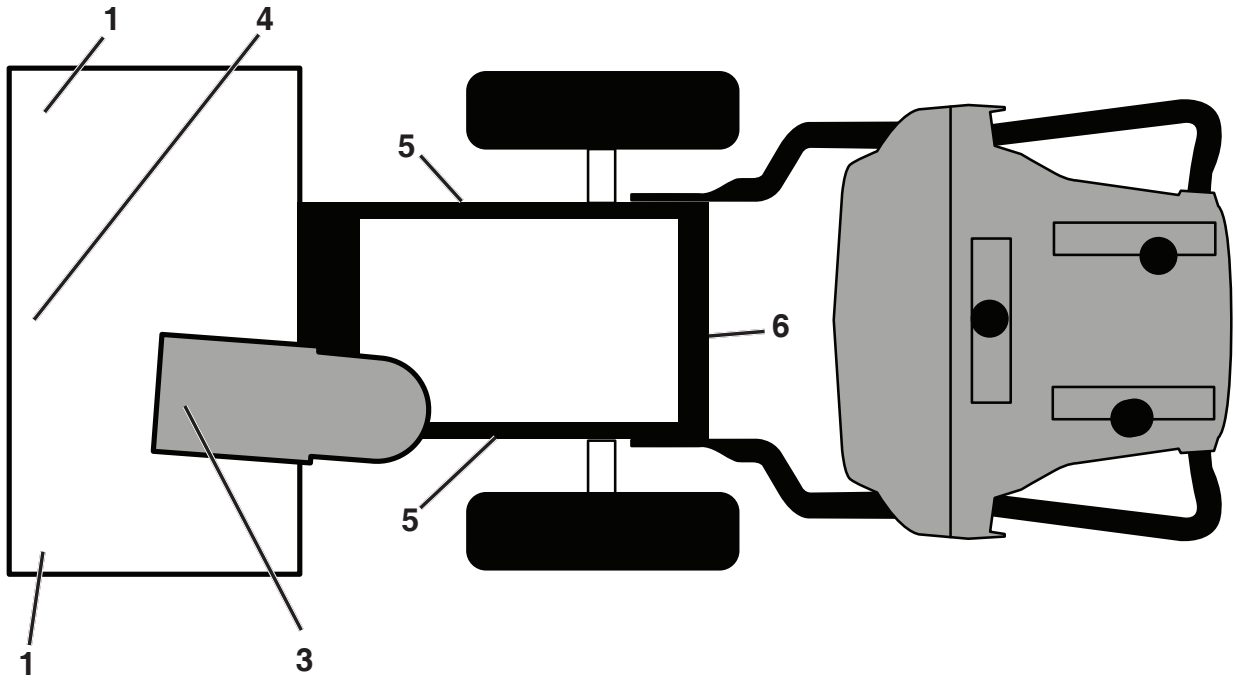

KEY NO.	PART NO.	DESCRIPTION
1	532 19 96-83	DECAL, DANGER
3	532 19 96-82	DECAL, DANGER, DEFLECTOR
4	532 18 40-45	DECAL, AUGER
5	532 18 40-28	DECAL, BELT GUARD
6	532 18 04-33	DECAL, NOISE LEVEL
- -	115 68 55-20	OPERATOR'S MANUAL, EURO
- -	115 68 55-10	OPERATOR'S MANUAL, SCAN
- -	115 68 55-50	OPERATOR'S MANUAL, EBLOC
- -	115 68 55-40	OPERATOR'S MANUAL, BALTIC

NOTE: All component dimensions given in U.S. inches. 1 inch = 25.4 mm
IMPORTANT: Use only Original Equipment Manufacturer (O.E.M.) replacement parts. Failure to do so could be hazardous, damage your snow thrower and void your warranty.

REPAIR PARTS

COMPLETE LCT ENGINE - 580 42 61-05

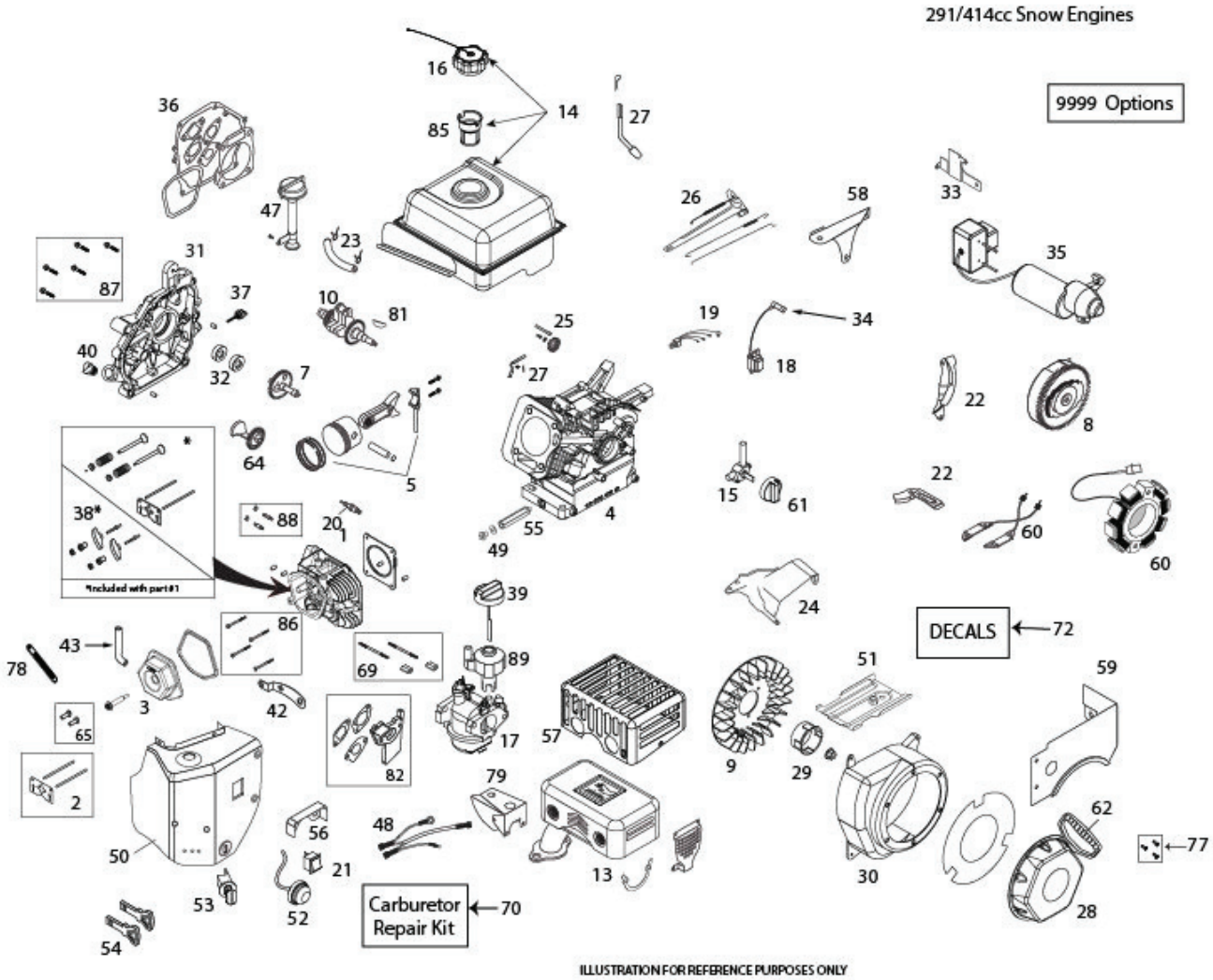

KEY NO.	PART NO.	DESCRIPTION
1	532 42 92-54	CYLINDER HEAD ASSEMBLY - 291CC (INCL. GASKET)
2	532 42 96-13	PUSH ROD & PLATE KIT (291CC) (INCL. VALVE COVER GSKT)
3	532 42 93-03	VALVE COVER (291/414CC) (INCL. GASKET)
4	587 14 25-01	CYLINDER ASSEMBLY-SNOW
5	532 42 92-58	PISTON & ROD ASSEMBLY (291CC)
6	587 14 26-01	CONNECTING ROD ASSEMBLY (291CC)
7	532 42 92-53	CAMSHAFT - MCR (291CC)
8	532 44 38-95	FLYWHEEL - ELECTRIC START (5-CHARGING MAGNETS) (291CC)
9	532 42 92-38	COOLLNG FAN - FLYWHEEL (PLASTIC - 291CC)
10	587 12 45-01	CRANKSHAFT (#18 KEYED 291CC SNOW)
13	587 12 47-01	MUFFLER ASSEMBLY-SNOW
14	532 43 48-89	FUEL TANK (291CC-SNOW) (3.6L BLACK W/PLASTIC CAP)
15	532 42 92-34	FUEL TANK ON/OFF VALVE - GEN II SNOW
16	532 42 92-11	FUEL TANK CAP - BLACK PLASTIC (VENTED) (SAME AS SKSN0301.1)
17	587 12 46-01	CARBURETOR (L11) 291CC SNOW) (W/GSKTS & SPACER)
18	532 44 38-97	IGNITION COIL (CDI) (291-414CC) (HI-TEMP)

NOTE: All component dimensions given in U.S. inches. 1 inch = 25.4 mm

IMPORTANT: Use only Original Equipment Manufacturer (O.E.M.) replacement parts. Failure to do so could be hazardous, damage your snow thrower and void your warranty.

REPAIR PARTS

COMPLETE LCT ENGINE - 580 42 61-05

KEY NO.	PART NO.	DESCRIPTION
20	532 42 92-55	SPARK PLUG (SAME AS SK2083810.1)
21	532 42 92-23	ON/OFF SWITCH - ROCKER (SAME AS SKSN0403.1)
22	532 42 92-32	SHIELD - FLYWHEEL (414CC SNOW)
23	532 43 21-46	FUEL HOSE KIT (229MM)
24	532 43 55-79	SPEED CONTROL BRACKET (FIXED)
25	532 42 92-92	GOVERNOR GEAR ASSEMBLY
26	532 42 92-48	GOVERNOR ARM & LINK KIT (291CC SNOW)
27	532 42 92-50	GOVERNOR ARM PADDLE
28	532 42 92-26	RECOIL STARTER - BLACK 291CC SNOW
29	532 42 92-27	STARTER CUP - 291CC
SNOW		
30	587 14 27-01	BLOWER HOUSING - BLACK ES (291CC SNOW)
31	532 42 92-41	CRANKCASE COVER ASSY (HOFT & 2-LOW FILLS)
32	532 42 92-83	OIL SEAL KIT (291CC)
33	587 14 28-01	ELECTRIC STARTER SWITCH BOX BRACKET - 291CC SNOW
34	532 43 69-66	SPARK PLUG BOOT - WITH METAL SHIELD (SNOW)
35	532 43 74-63	230V ELECTRIC STARTER (291CC)
36	532 42 96-15	ENGINE GASKET KIT (291CC)
37	532 43 55-34	SMALL BLACK OIL DIPSTICK (PLASTIC)
38	532 42 96-12	ROCKER ARM KIT (291/414CC)(INCL. GASKET)
39	532 42 92-24	CHOKE CONTROL KNOB (GEN II RED)
40	532 42 92-42	NON-REMOVABLE PLASTIC PLUG (291/414CC)
42	532 42 92-57	CDI BOX BRACKET-SNOW
43	580 35 38-01	BREATHER TUBE (291/414CC)
47	587 13 98-01	HIGH OIL-FILL TUBE & CAP (NO DIPSTICK)
48	532 42 92-84	WIRE HARNESS (414CC SNOW)
49	532 43 54-94	OIL DRAIN PLUG W/WASHER (291/414CC)
50	532 42 92-06	HEATER BOX KIT (291CC SNOW)
51	532 42 92-31	SHIELD - CYLINDER (291/414CC SNOW)
52	532 42 92-18	PRIMER BULB WITH HOSE-SNOW (SAME AS SKSN0304.1)
53	532 42 92-21	SAFETY KEY SWITCH W/KEYS (SAME AS SKSN0401.1)
54	532 44 30-59	KEY SET - RED (2) (SNOW)
55	587 13 99-01	OIL DRAIN TUBE-SNOW (291/414CC)
56	532 42 92-13	CARBURETOR VAPOR SHIELD - 414CC SNOW
57	532 43 74-64	CE COMPLLANT MUFFLER SHIELD (291CC)
58	532 42 92-25	SHIELD - GOVERNOR LINKAGE -SNOW
59	532 42 92-87	FUEL TANK SKIRT (291CC SNOW)
60	532 44 38-96	CHARGING COIL (60-WATT AC) (291/414CC)
61	532 43 27-52	FUEL CONTROL KNOB (GEN II SNOW - RED)
62	532 44 38-99	STARTER GRIP-SNOW (DELUXE)
65	581 37 29-01	TAPPET KIT (291/414CC) (SET OF 2)
69	586 32 66-01	CARBURETOR MTG STUD KIT (2) (291CC SNOW)
70	580 35 37-01	CARBURETOR REPAIR KIT (291/414CC)
77	532 43 26-88	RECOIL BOLT KIT (INCL. (3) MTG BOLTS)
81	585 29 72-02	WOODRUFF FLYWHEEL KEY (5-PACK) (4X6X18MM)
82	585 02 05-02	CARBURETOR SPACER (291CC)
85	586 32 56-01	FUEL TANK STRAINER
86	586 32 74-01	CYLINDER HEAD BOLT KIT (4) (291-414CC)
87	586 32 72-01	CC COVER BOLT KIT (7) (291CC)
88	586 32 68-01	MUFFLER MTG STUD KIT (2)
89	587 12 48-01	IDLE SPEED CONTROL KNOB
9999	586 32 64-01	HIGH ALTITUDE JET (>5,000 FEET)(291CC L11 CARBURETOR)

NOTE: All component dimensions given in U.S. inches. 1 inch = 25.4 mm

IMPORTANT: Use only Original Equipment Manufacturer (O.E.M.) replacement parts. Failure to do so could be hazardous, damage your snow thrower and void your warranty.