2141
2145
2150

Operator's manual

Please read these instructions carefully and make sure you understand them before using the machine.

KEY TO SYMBOLS

Symbols

CAUTION! Chain saws can be dangerous! Careless or incorrect use can result in serious or fatal injury to the operator or others.

Please read the instructions carefully and make sure you understand them before using the saw.

Always wear:
- Approved protective helmet
- Approved hearing protection
- Protective glasses or visor

This product is in accordance with applicable EC directives.

Noise emission to the environment according to the European Community's Directive.
The machine's emission is specified in chapter Technical data and on label.

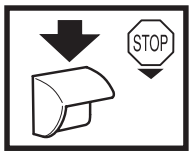

Switch off the engine by moving the stop switch to the STOP position before carrying out any checks or maintenance.

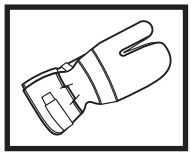

Always wear approved protective gloves.

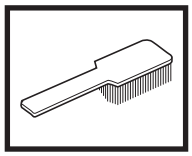

Regular cleaning is required.

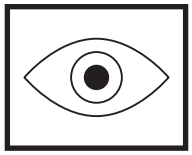

Visual check.

Protective glasses or a visor must be worn.

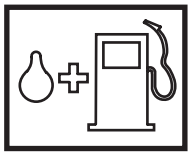

Refuelling

Chain oil and chain oil flow adjustment

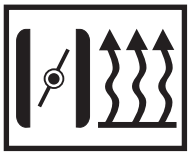

If your saw bears this decal it is equipped with carburettor heating.

This product is fitted with a catalytic converter

Other symbols/decals on the machine refer to special certification requirements for certain markets.

Before using a new saw

- Read the instructions carefully.
- Check cutting equipment is correctly fitted and adjusted. See page 25.
- Refuel and start the saw. Check the carburettor settings. See pages 26-29.
- Do not use the saw until sufficient chain oil has reached the chain, see page 14.

IMPORTANT! If the carburettor mixture is too lean it greatly increases the risk of engine failure.
Poor maintenance of the air filter will cause carbon build-up on the spark plug and lead to difficult starting.
If the chain is badly adjusted it will cause increased wear or damage to the bar, drive sprocket and chain.

Under no circumstances should you modify the original design of the chain saw without approval from the manufacturer. Always use genuine spare parts. Unauthorized modifications or accessories may lead to serious injury or death.

A chain saw is a dangerous tool if used carelessly or incorrectly and can cause serious, even fatal injuries. It is very important that you read and understand these instructions.

WARNING! The insides of mufflers fitted with catalytic converters contain chemicals that may be carcinogenic. Avoid contact with these elements in the event of a defective muffler.

Long term inhalation of the engine's exhaust fumes, chain oil mist and dust from sawdust can represent a health risk.

Jonsered has a policy of continuous product development and therefore reserves the right to modify the design and appearance of products without prior notice.

Contents

Key to symbols 2
Safety instructions
Personal protective equipment 4
Chain saw safety equipment 4
Inspecting, maintaining and servicing chain saw safety equipment 8
Cutting equipment 10
How to avoid kickback 16
General safety precautions 18
General working instructions 19
What is what?
What is what? 24
Assembly
Mounting guide bar and chain 25
Fuel handling
Fuelmix 26
Fuelling 27
Start and stop
Start and stop 28
Maintenance
Carburettor 29
Starter device 30
Air filter 31
Spark plug 31
Muffler 31
Needle bearing maintenance 31
Adjustment of the oil pump 31
Cooling system 32
Centrifugal cleaning ”Turbo” 32
Winter use 32
Daily maintenance 33
Weekly maintenance 33
Monthly maintenance 33
Technical data
2141 34
2145 34
2150 34

SAFETY INSTRUCTIONS

PERSONAL PROTECTIVE EQUIPMENT

MOST CHAIN SAW ACCIDENTS HAPPEN WHEN THE CHAIN TOUCHES THE OPERATOR. You must use approved personal protective equipment whenever you use the machine. Personal protective equipment cannot eliminate the risk of injury but it will reduce the degree of injury if an accident does happen. Ask your dealer for help in choosing the right equipment.

Long or continuous exposure to high noise levels may cause permanent hearing impairment. Always wear approved hearing protection when operating a chain saw.

- PROTECTIVE HELMET
- HEARING PROTECTION
- PROTECTIVE GLASSES OR VISOR

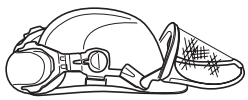

- PROTECTIVE GLOVES WITH SAW PROTECTION

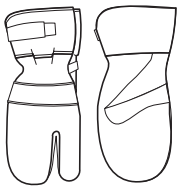

- PROTECTIVE TROUSERS WITH SAW PROTECTION

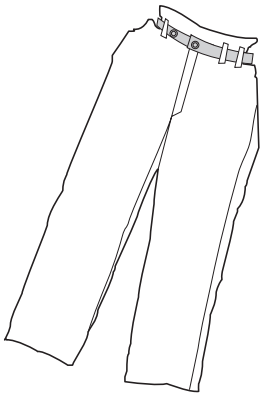

- BOOTS WITH SAW PROTECTION, STEEL TOE-CAP AND NON-SLIP SOLE

Generally clothes should be close-fitting without restricting your freedom of movement.

- ALWAYS HAVE A FIRST AID KIT NEARBY

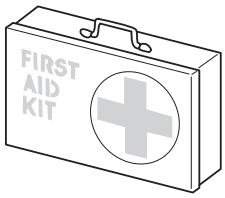

CHAIN SAW SAFETY EQUIPMENT

This section explains the various safety features of the saw, how they work, and basic inspection and maintenance you should carry out to ensure safe operation. (See the *"What is what?"* section to find out where these components are on Your saw).

NEVER USE A CHAIN SAW THAT HAS FAULTY SAFETY EQUIPMENT! Carry out the inspection, maintenance and service routines listed in this section.

- Chain brake and front hand guard

- Throttle lock

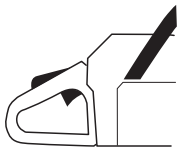

- Chain catcher

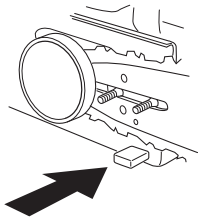

- Right hand guard

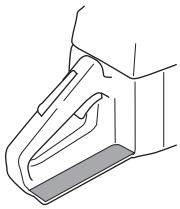

- Vibration damping system

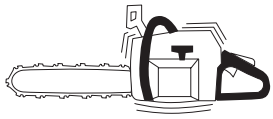

- Stop switch

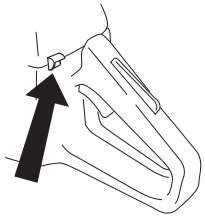

- Muffler

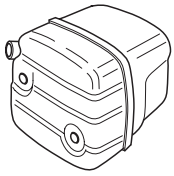

- Cutting equipment (see *"Cutting equipment"* section).

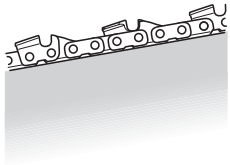

1 Chain brake and front hand guard

YOUR chain saw is equipped with a chain brake that is designed to stop the chain immediately if you get a kickback.
The chain brake reduces the risk of accidents, but only You can prevent them.

Take care when using your saw and make sure the kickback zone of the bar never touches any object.

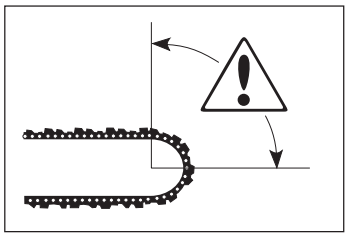

1 The chain brake (A) can either be activated manually (by your left hand) or automatically by the inertia release mechanism (a free-swinging pendulum). On most of our models the front hand guard acts as a counterweight in case of kickback.

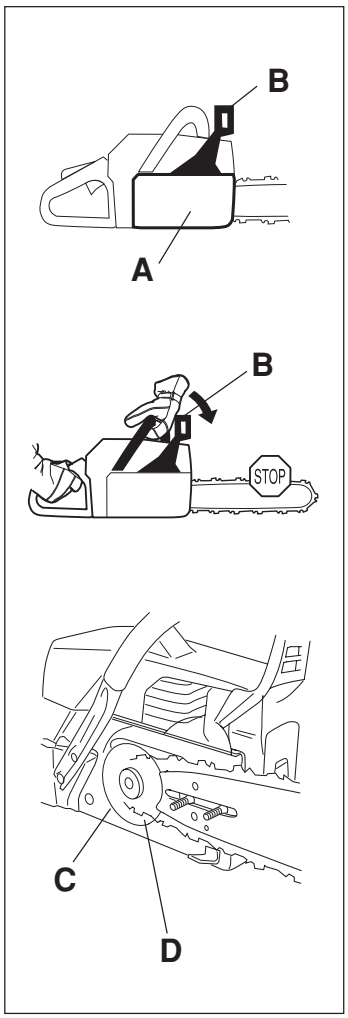

The brake is applied when the front hand guard (B) is pushed forwards.

This movement activates a spring-loaded mechanism that tightens the Brake Band (C) around the engine drive system (D) (Clutch Drum).

2 The front hand guard is not designed solely to activate the chain brake. Another important safety feature is that it prevents the chain from hitting your left hand if you lose your grip on the front handle.

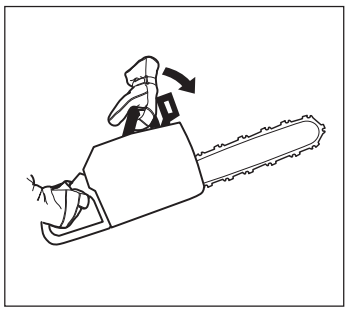

3a Starting

The chain brake must be engaged when the chain saw is started.

b You can also use the chain brake as a temporary brake when you change position or if you put the saw down for a short time. You should also apply the chain brake manually if there is a risk of the chain accidentally hitting anyone or anything close by.

4 To release the chain brake pull the front hand guard backwards, towards the front handle.

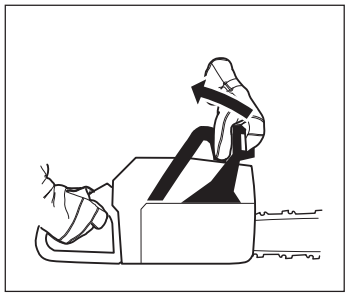

5 As mentioned in section A, kickback can be very sudden and violent.
Most kickbacks are minor and do not always activate the chain brake. If this happens you should hold the chain saw firmly and not let go.

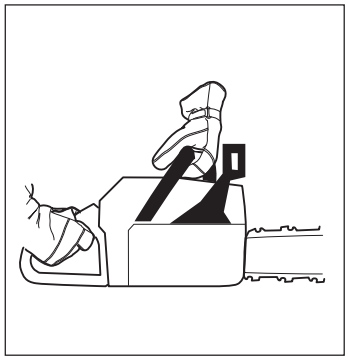

6 The way the chain brake is triggered, either manually or automatically, depends on the force of the kickback and the position of the chain saw in relation to the object that the kickback zone of the bar strikes.

If you get a violent kickback while the kickback zone of the bar is farthest away from you the chain brake will be activated by the movement of the counterweight (INERTIA ACTIVATED).

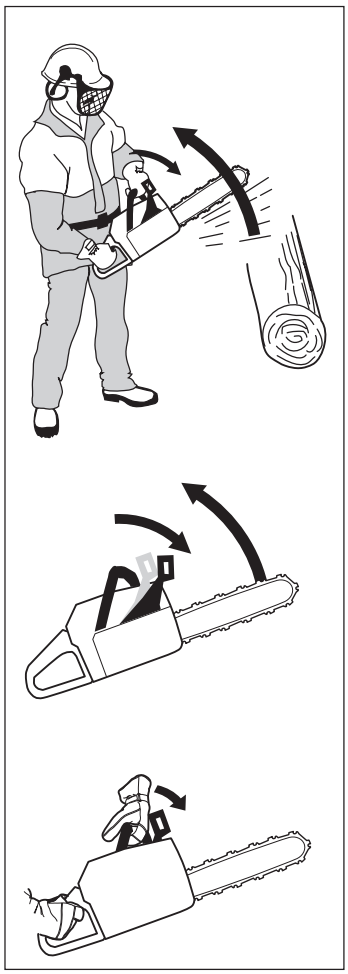

If the kickback is less violent or the kickback zone of the bar is closer to you the chain brake will be activated manually by the movement of your left hand.

7 During felling your left hand grasps the front handle in such a way that it cannot activate the front hand guard. In this position the chain brake can only be activated by the inertia action of the counterweight.

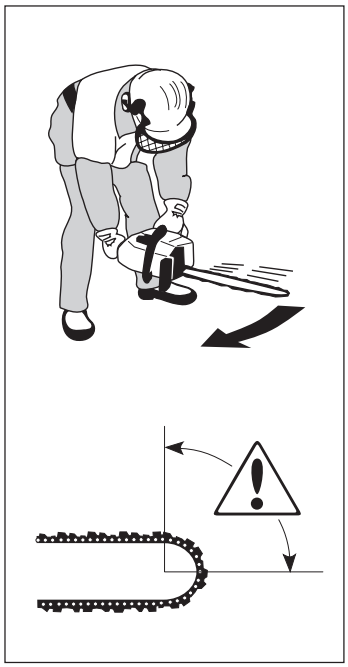

The inertia activated chain brake increases your safety but there are certain factors to remember (see point 6 above).

2 Throttle lock

The throttle lock is designed to prevent accidental operation of the throttle control. When you press the lock (A) (i.e. when you grasp the handle) it releases the throttle trigger (B).
When you release the handle the throttle trigger and the throttle lock both move back to their original positions. This movement is controlled by two independent return springs. This arrangement means that the throttle control is automatically locked at the idle setting when you release the handle.

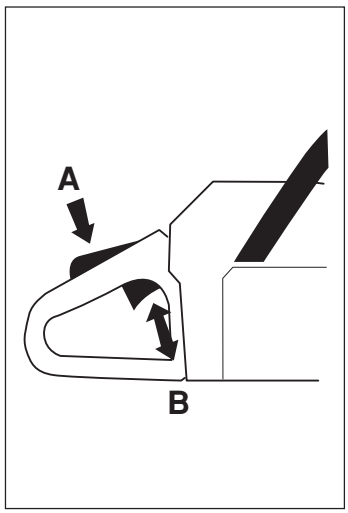

3 Chain catcher

The chain catcher is designed to catch the chain if it snaps or jumps off. This should not happen if the chain is properly tensioned (see section on *"Assembly"*) and if the bar and chain are properly serviced and maintained.
(See section on *"General workinginstructions"*).

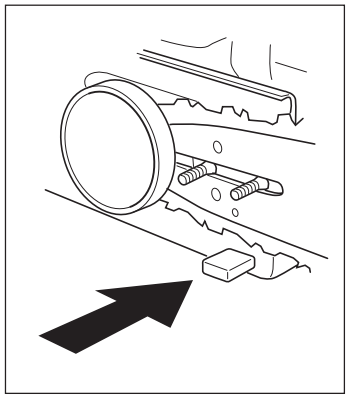

4 Right hand guard

Apart from protecting your hand if the chain jumps or snaps, the right hand guard stops branches and twigs from interfering with your grip on the rear handle.

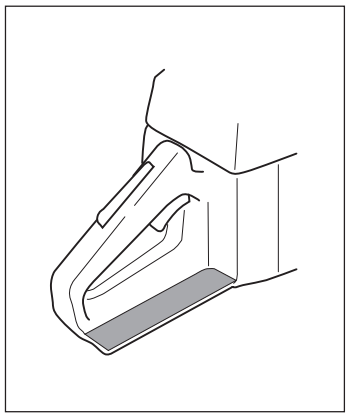

5 Vibration damping system

Your chain saw is equipped with a vibration damping system that is designed to minimise vibrations and make operation easier.

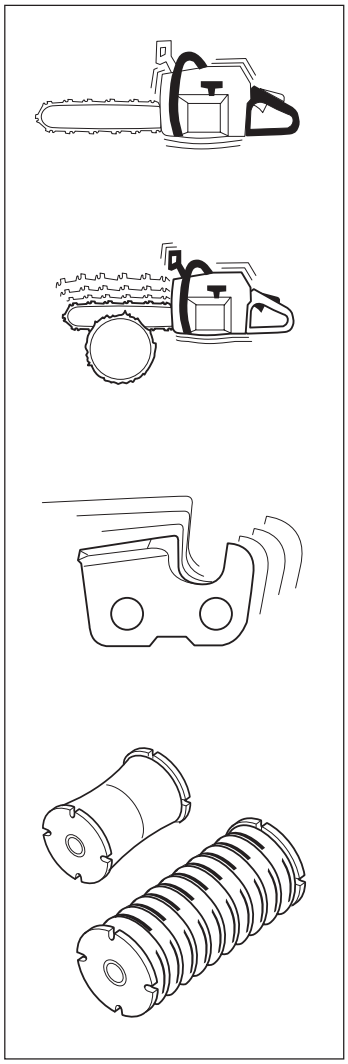

When you use a chain saw vibrations are generated by the uneven contact between the chain and the wood you are cutting.

Cutting hardwoods (most broadleaf trees) creates more vibration than cutting softwoods (most conifers). Cutting with a chain that is blunt or faulty (wrong type or badly sharpened, see section D) will increase the vibration level.

The vibration damping system reduces the vibrations transmitted from the engine and chain to the handles of the chain saw. The body of the saw, including the cutting equipment, is insulated from the handles by vibration damping units.

Overexposure to vibration can lead to circulatory damage or nerve damage in people who have impaired circulation.
Contact your doctor if you experience symptoms of overexposure to vibration.
These symptoms include numbness, loss of feeling, tingling, pricking, pain, loss of strength, changes in skin colour or condition.
These symptoms normally appear in the fingers, hands or wrists.

6 Stop switch

Use the stop switch to switch off the engine.

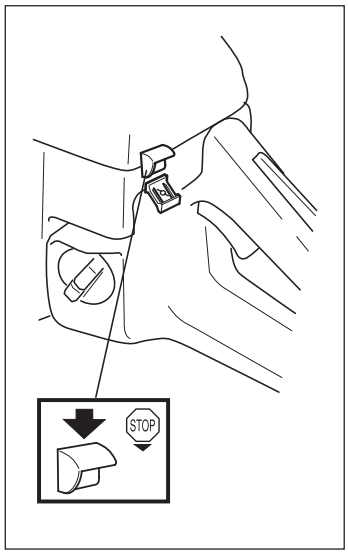

7 Muffler

The muffler is designed to keep noise levels to a minimum and to direct exhaust fumes away from the user.

The exhaust fumes from the engine are very hot and may contain sparks which can start a fire. Never start the saw indoors or near combustible material!

In areas with a hot, dry climate there is a high risk of forest fires. These areas are sometimes controlled by legislation and requirements that among other things the muffler must be equipped with an approved type of spark arrestor mesh.

For mufflers it is very important that you follow the instructions on checking, maintaining and servicing your saw (see the section on *"Inspecting, maintaining and servicing chain saw safety equipment"*).

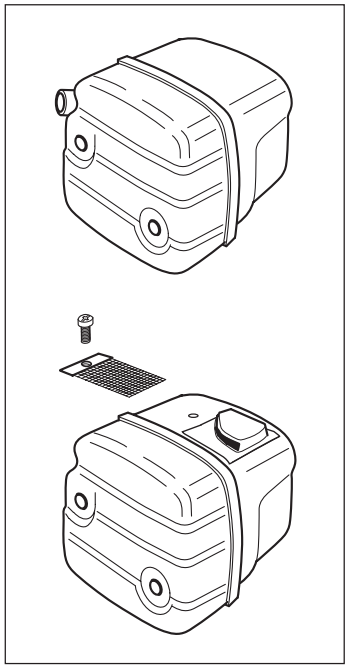

The muffler gets very hot in use and remains so for a short time afterwards. DO NOT TOUCH THE MUFFLER IF IT IS HOT!

WARNING!
The catalytic converter muffler gets very hot during and after use. This also applies during idling. Be aware of the fire hazard, especially when handling the saw near flammable substances or vapours.

Inspecting, maintaining and servicing chain saw safety equipment

SPECIAL TRAINING IS REQUIRED to service and repair chain saws. This is especially true of chain saw safety equipment. If your chain saw fails any of the checks described below take it to your SERVICE AGENT.
When you buy any of our products we guarantee the availability of professional repairs and service. If the retailer who sells your saw is not a SERVICING DEALER, ask him for the address of your nearest SERVICE AGENT.

1 Chain brake and front hand guard

1 Checking brake band wear

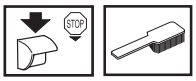

Brush off any sawdust, resin and dirt from the chain brake and clutch drum. Dirt and wear can impair operation of the brake.

Regularly check that the brake band is at least 0.6 mm thick at its thinnest point.

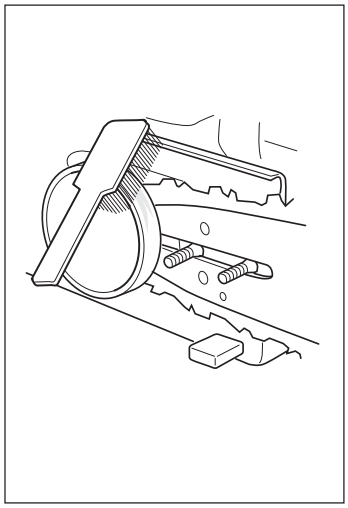

2 Checking the front hand guard

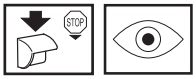

A Make sure the FRONT HAND GUARD is not damaged and that there are no visible defects such as cracks.

B Move the front hand guard forwards and back to make sure it runs freely and that it is securely anchored to the clutch cover.

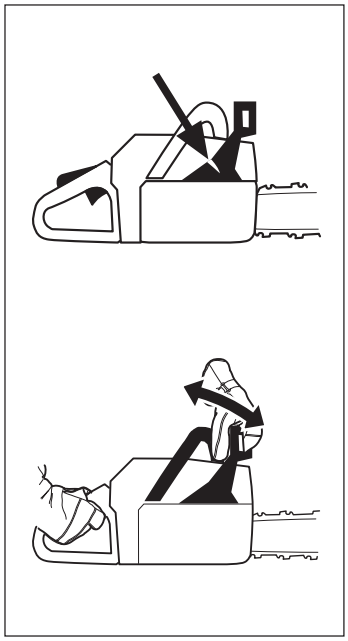

3 Checking the inertia brake release

Hold the chain saw over a stump or other firm object. Let go of the front handle so that the bar falls onto the stump.

When the bar hits the stump the brake should be applied.

4 Checking the brake trigger

Place the chain saw on a firm surface and start it. Make sure the chain does not touch the ground or any other object. See the instructions under the heading Start and stop.

Grasp the saw firmly, wrapping your fingers and thumbs around the handles.

Apply full throttle and activate the chain brake by tilting your wrist forward onto the front hand guard. Do not let go of the front handle.

The chain should stop immediately.

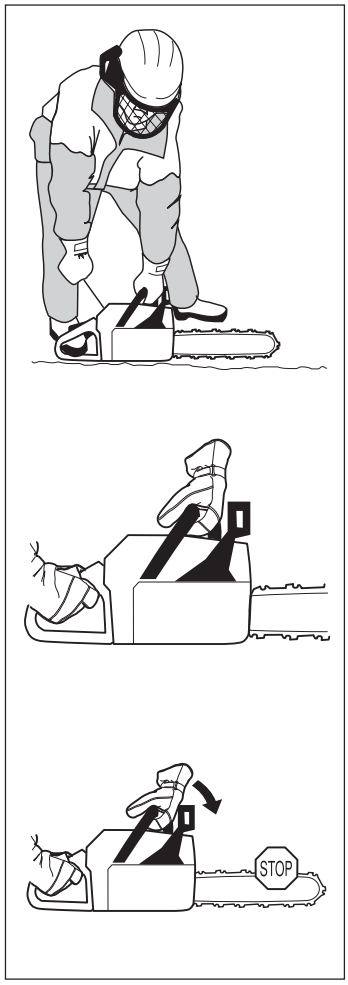

2 Throttle lock

1 Make sure the throttle control is locked at the idle setting when you release the throttle lock.

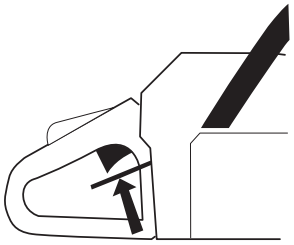

2 Press the throttle lock and make sure it returns to its original position when you release it.

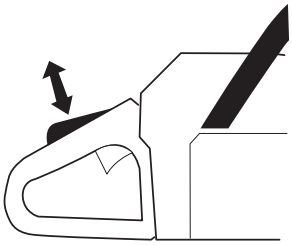

3 Check that the throttle control and throttle lock move freely and that the return springs work properly.

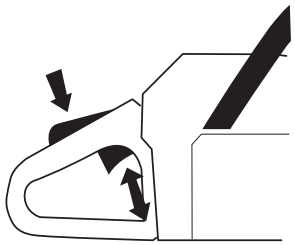

4 Start the saw and apply full throttle. Release the throttle control and check that the chain stops and remains stationary. If the chain rotates when the throttle is on idle setting you should check the carburettor idle adjustment. See the section on *"Maintenance"*.

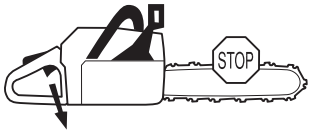

3 Chain catcher

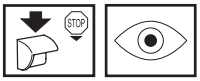

Check that the CHAIN CATCHER is not damaged and is firmly attached to the body of the saw.

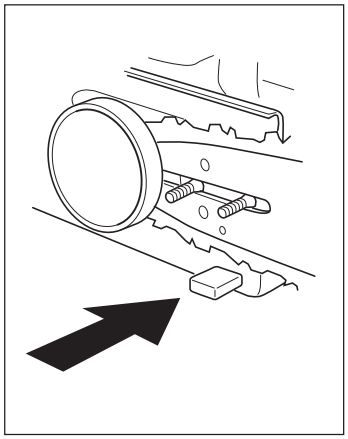

4 Right hand guard

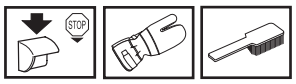

Check that the right hand guard is not damaged and that there are no visible defects, such as cracks.

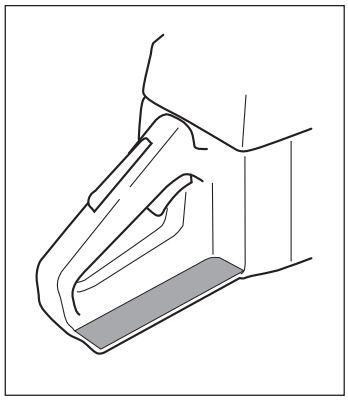

5 Vibration damping system

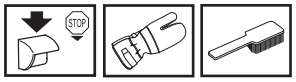

Regularly check the vibration damping units for cracks or deformation

Make sure the vibration damping units are securely attached to the engine unit and handles.

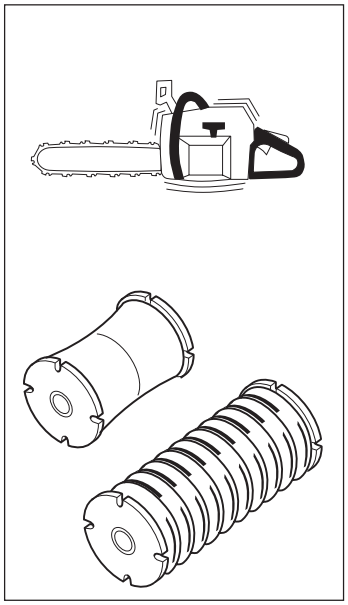

6 Stop switch

Start the engine and make sure the engine stops when you move the stop switch to the stop setting.

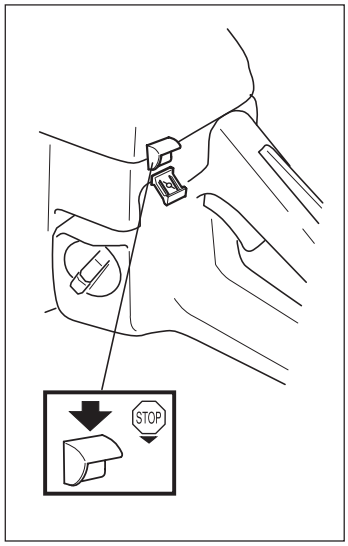

7 Muffler

Never use a chain saw that has a faulty muffler.

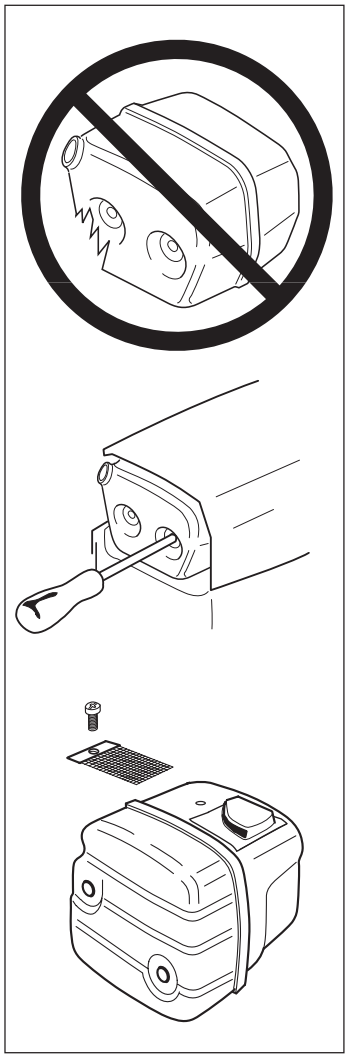

Regularly check that the muffler is securely attached to the chain saw.

If the muffler on your saw is fitted with a spark arrestor mesh this must be cleaned regularly. A blocked mesh will cause the engine to overheat and may lead to serious damage.

Never use a muffler if the spark arrestor mesh is missing or defective.

NEVER USE A CHAIN SAW WITH FAULTY SAFETY EQUIPMENT. CARRY OUT THE CHECKS AND MAINTENANCE MEASURES DESCRIBED IN THIS SECTION. IF YOUR CHAIN SAW FAILS ANY OF THESE CHECKS CONTACT YOUR SERVICE AGENT TO GET IT REPAIRED.

CUTTING EQUIPMENT

This section describes how to choose and maintain your cutting equipment in order to:

- **Reduce the risk of kickback.**
- **Reduce the risk of the chain breaking or jumping.**
- **Obtain maximum cutting performance.**
- **Extend the life of cutting equipment.**

The 5 basic rules

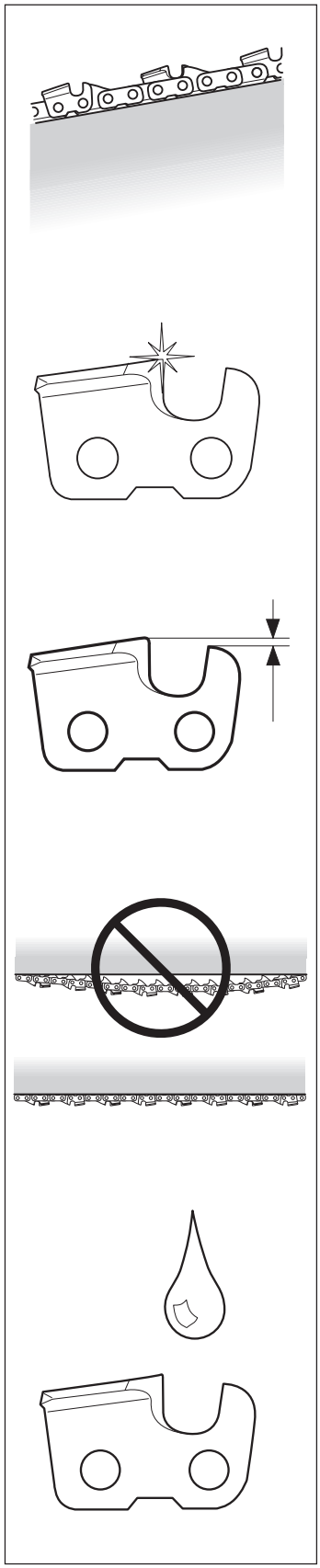

1 **Only use cutting equipment recommended by us!** See the *"Technical data"* section.

2 **Keep the chain cutting teeth properly sharpened! Follow our instructions and use the recommended file gauge.** A damaged or badly sharpened chain increases the risk of accidents.

3 **Maintain the correct raker clearance! Follow our instructions and use the recommended raker gauge.** Too large a clearance increases the risk of kickback.

4 **Keep the chain properly tesioned!** If the chain is slack it is more likely to jump off and lead to increased wear on the bar, chain and drive sprocket.

5 **Keep cutting equipment well lubricated and properly maintained!** A poorly lubricated chain is more likely to break and lead to increased wear on the bar, chain and drive sprocket.

1 Cutting equipment designed to minimise kickback

Faulty cutting equipment or the wrong combination of bar and chain increases the risk of kickback. Use only the bar and chain combinations recommended in the *"Technical data"* section.

The only way to avoid kickback is to make sure that the kick-back zone of the bar never touches anything.
By using cutting equipment with "built-in" kickback protection and keeping the chain sharp and well-maintained you can reduce the effects of kickback.

A Bar

The smaller the tip radius the smaller the kickback zone and the lower the chance of kickback.

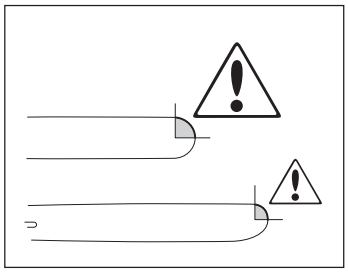

B Saw chain

A saw chain is made up of a number of links, which are available in standard and low-kickback versions.

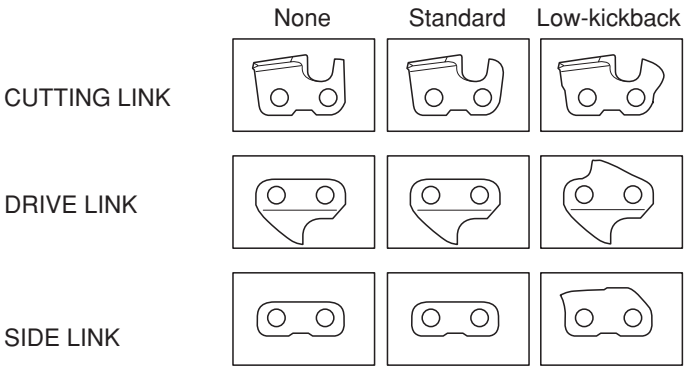

Combining these links in different ways gives different degrees of kickback reduction. In terms of kickback reduction alone, four different types of link are available.

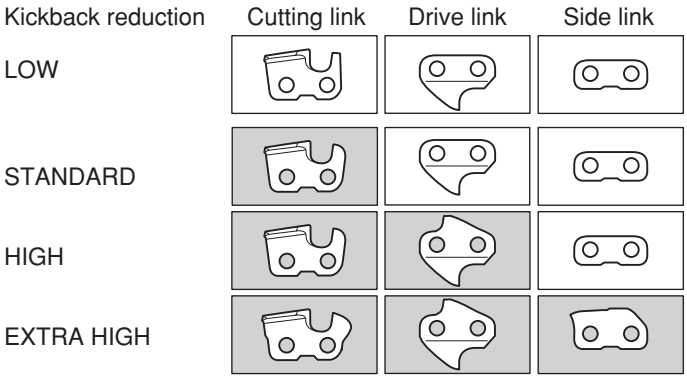

C Some terms that describe the bar and chain

When the cutting equipment supplied with your saw becomes worn or damaged you will need to replace it. Use only the type of bar and chain recommended by us. See the *"Technical data"* section to find out which equipment is recommended for your saw.

Bar

- LENGTH (inches/cm)
- NUMBER OF TEETH ON BAR TIP SPROCKET (T). Small number = small tip radius = low-kickback
- CHAIN PITCH (inches)
  The spacing between the drive links of the chain must match the spacing of the teeth on the bar tip sprocket and drive sprocket.
- NUMBER OF DRIVE LINKS
  The number of drive links is determined by the length of the bar, the chain pitch and the number of teeth on the bar tip sprocket.
- BAR GROOVE WIDTH (inches/mm)
  The groove in the bar must match the width of the chain drive links.
- SAW CHAIN OIL HOLE AND HOLE FOR CHAIN TENSIONER
  The bar must be matched to the chain saw design.

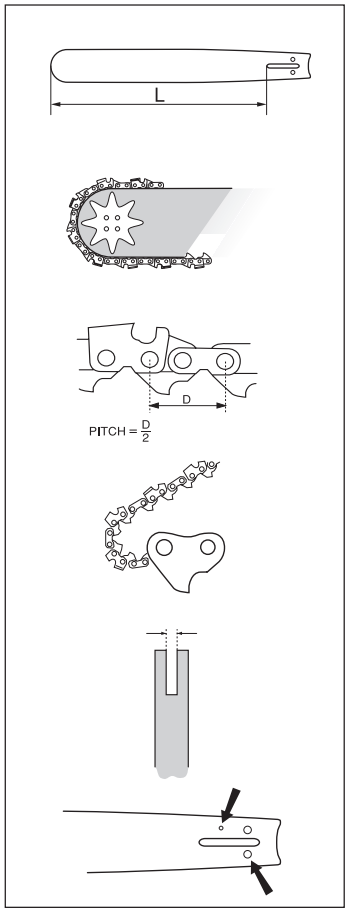

Saw chain

- SAW CHAIN PITCH (=PITCH) (inches)
- DRIVE LINK WIDTH (mm/inches)
- NUMBER OF DRIVE LINKS
- LEVEL OF KICKBACK REDUCTION
  The level of kickback reduction offered by a chain is indicated by its model number.
  See the *"Technical data"* section to find the model numbers of chains that are recommended for use with your saw.

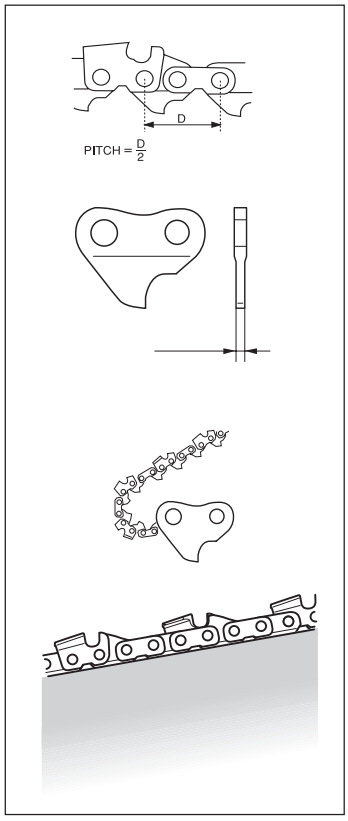

2 Sharpening your chain and adjusting raker clearance

The risk of kickback is increased with a badly sharpened chain!

A General information on sharpening cutting teeth

- Never use a blunt chain. When the chain is blunt you have to exert more pressure to force the bar through the wood and the cuttings will be very small. If the chain is very blunt it will not produce any cuttings at all, just wood powder.

- A sharp chain eats its way through the wood and produces long, thick cuttings.

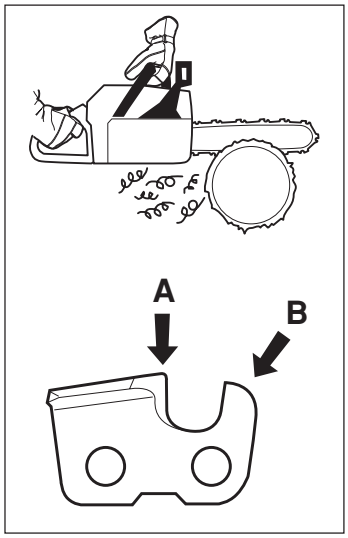

- The cutting part of the chain is called the CUTTING LINK and this consists of a CUTTING TOOTH (A) and the RAKER LIP (B). The cutting depth is determined by the difference in height between the two.

- When you sharpen a cutting tooth there are five important factors to remember.

FILING ANGLE

CUTTING ANGLE

FILE POSITION

ROUND FILE DIAMETER

FILE DEPTH

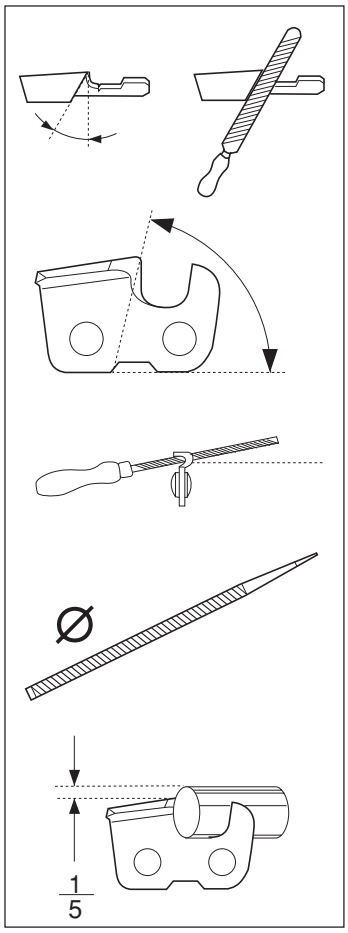

See the *"Technical data"* section for information about sharpening your saw chain.

It is very difficult to sharpen a chain correctly without the right equipment. We recommend you use a file gauge. This will help you obtain the maximum kickback reduction and cutting performance from your chain.

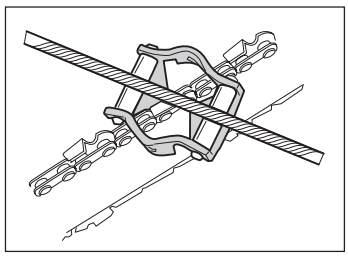

The following faults will increase the risk of kickback considerably.

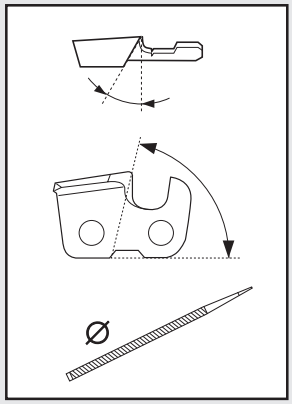

- **FILE ANGLE TOO LARGE**
- **CUTTING ANGLE TOO SMALL**
- **FILE DIAMETER TOO SMALL**

B Sharpening cutting teeth

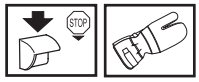

To sharpen cutting teeth you will need a ROUND FILE and a FILE GAUGE. See the *"Technical data"* section for information on the size of file and gauge that are recommended for your saw chain.

1 Check that the chain is correctly tensioned. A slack chain is difficult to sharpen correctly.

2 Always file cutting teeth from the inside face, reducing the pressure on the return stroke.

File all the teeth on one side first, then turn the saw over and file the teeth on the other side.

3 File all the teeth to the same length. When the length of the cutting teeth is reduced to 4 mm (0,16") the chain is worn out and should be replaced.

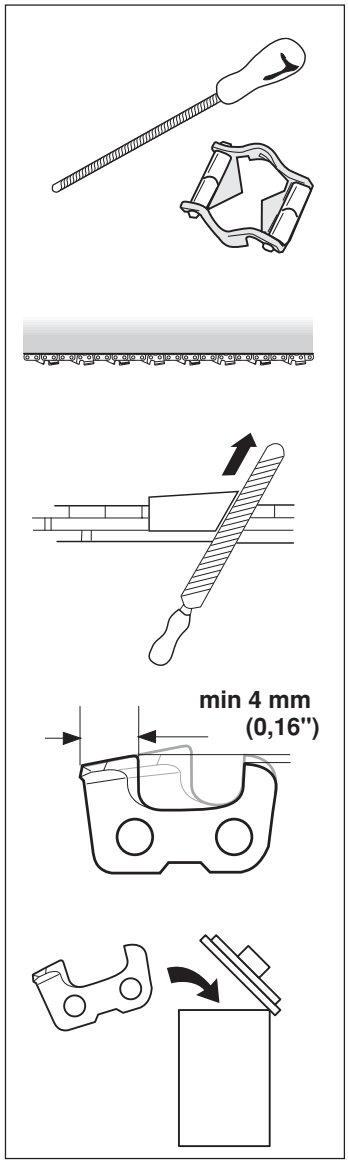

C General advice on setting raker clearance

- When you sharpen the cutting teeth you reduce the RAKER CLEARANCE (cutting depth). To maintain cutting performance you must file back the raker teeth to the recommended height.

  See the *"Technical data"* section to find the raker clearance for your saw chain.

- On a low-kickback cutting link the front edge of the raker lip is rounded. It is very important that you maintain this radius or bevel when you adjust the raker clearance.

- We recommend the use of a raker gauge to achieve the correct clearance and bevel on the raker lip.

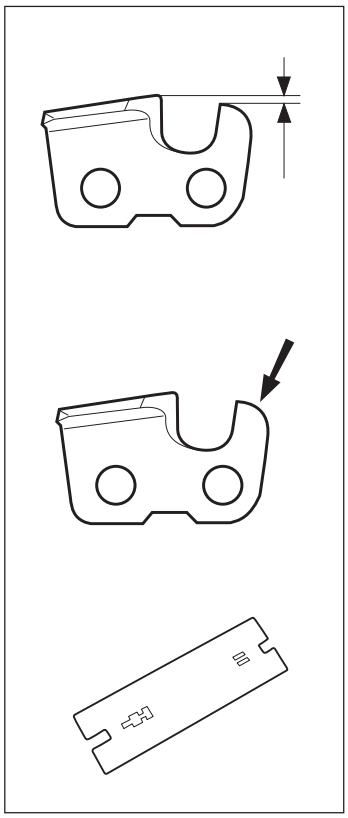

The risk of kickback is increased if the raker clearance is too large!

D Setting the raker clearance

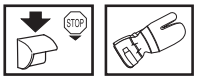

- Before setting the raker clearance the cutting teeth should be newly sharpened.
  We recommend that you adjust the raker clearance every third time you sharpen the chain. NOTE! This recommendation assumes that the length of the cutting teeth is not reduced excessively.

- To adjust the raker clearance you will need a FLAT FILE and a RAKER GAUGE.

- Place the gauge over the raker lip.

- Place the file over the part of the lip that protrudes through the gauge and file off the excess. The clearance is correct when you no longer feel any resistance as you draw the file over the gauge.

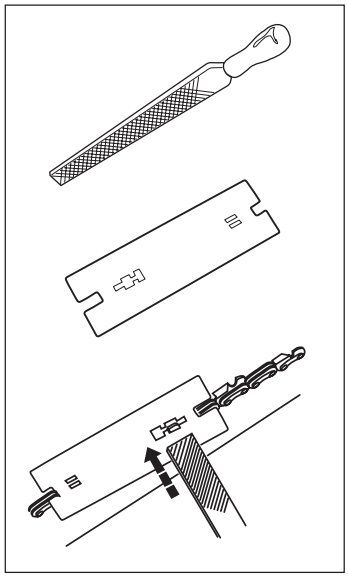

3 Tensioning the chain

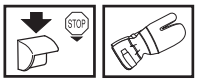

A slack chain may jump off and cause serious or even fatal injury.

- The more you use a chain the longer it becomes. It is therefore important to adjust the chain regularly to take up the slack.

- Check the chain tension every time you refuel.
  NOTE! A new saw chain has a running-in period during which you should check the tension more frequently.

- Tension the chain as tightly as possible, but not so tight that you cannot pull it round freely by hand.

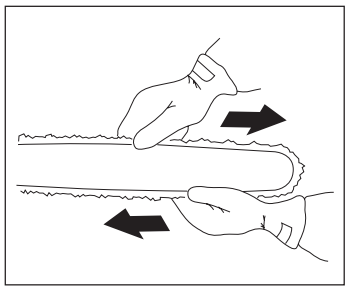

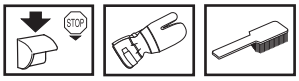

1 Undo the bar nuts that hold the clutch cover and chain brake, using the combination spanner. Then tighten the nuts by hand as tight as you can.

2 Raise the tip of the bar and stretch the chain by tightening the chain tensioning screw using the combination spanner. Tighten the chain until it not hang slack on the underside of the bar.

3 Use the combination spanner to tighten the bar nuts while lifting the tip of the bar at the same time. Check that you can pull the chain round freely by hand and that it is not slack on the bottom of the bar.

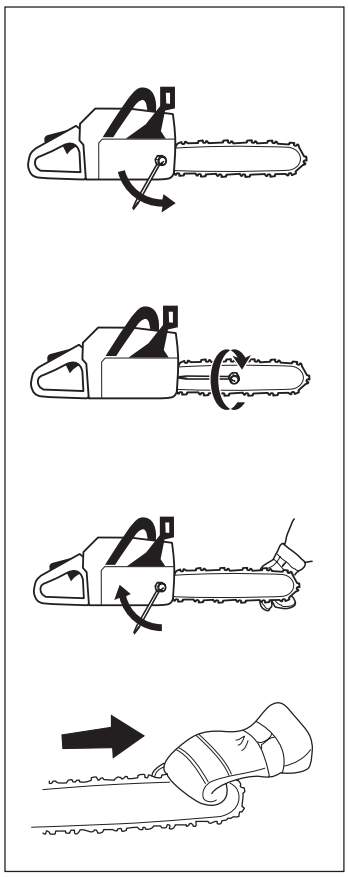

The position of the chain tensioning screw varies from model to model. See the*" What is what"* section to find out where it is on your saw.

4 Lubricating cutting equipment

Poor lubrication of cutting equipment may cause the chain to snap and lead to serious, even fatal injuries.

Prolonged inhalation of exhaust gases from the engine, chain lubrication oil mist and/or saw dust can be unhealthy.

A Chain oil

- Chainsaw chain oil must demonstrate good adhesion to the chain and also maintain its flow caracteristics regardless of whether it is warm summer or cold winter weather.
- As a chainsaw manufacturer we have developed an optimal chain oil which, with its vegetable oil base, is also biodegradable. We recommend the use of our own oil for both maximum chain life and to minimise environmental damage.
- If our own chain oil is not available, standard chain oil is recommended.
- In areas where oil specifically for lubrication of saw chains is unavailable, ordinary EP 90 transmission oil may be used.
- **Never use waste oil!**
  This is dangerous for yourself, the saw and the environment.

B Filling with chain oil

- All our chain saws have an automatic chain lubrication system. On some models the oil flow is also adjustable.
- The sizes of the chain oil tank and fuel tank have been chosen so that the saw will run out of fuel before running out of oil. This means that you should never run with a dry chain.

  However, this safety feature requires that you use the right sort of chain oil (if the oil is too thin it will run out before the fuel), and that you adjust the carburettor as recommended (a weak mixture may mean that the fuel lasts longer than the oil). You should also use the recommended cutting equipment (a bar that is too long will use more chain oil). The above conditions also apply to models with an adjustable oil pump.

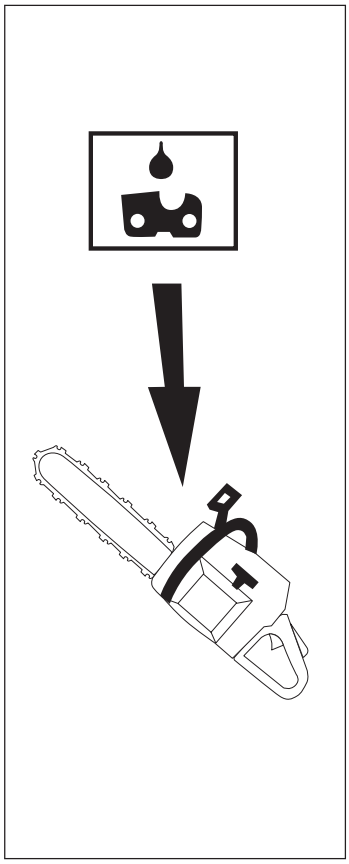

C Checking chain lubrication

- Check the chain lubrication each time you refuel.

  Aim the tip of the saw at a light coloured surface about 20 cm away. After 1 minute running at 3/4 throttle you should see a distinct line of oil on the light surface.

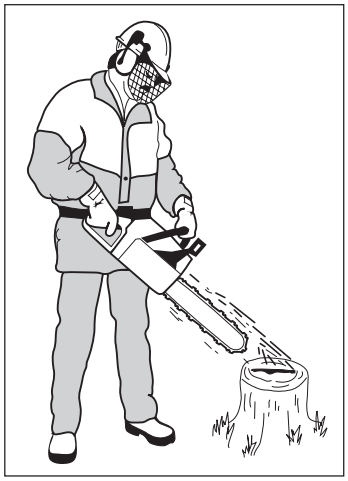

If the chain lubrication is not working:

1 Check that the oil channel in the bar is not obstructed. Clean if necessary.

2 Check that the groove in the edge of the bar is clean. Clean if necessary.

3 Check that the bar tip sprocket turns freely and that the lubricating hole in the tip is not blocked. Clean and lubricate if necessary.

If the chain lubrication system is still not working after carrying out the above measures you should **contact your service agent.**

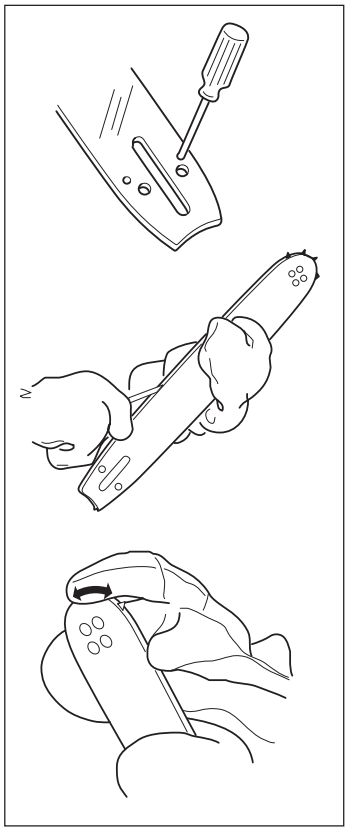

D Lubricating the bar tip sprocket

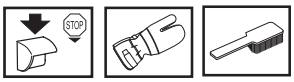

- Lubricate the bar tip sprocket each time you refuel. Use the special grease gun and a good quality bearing grease.

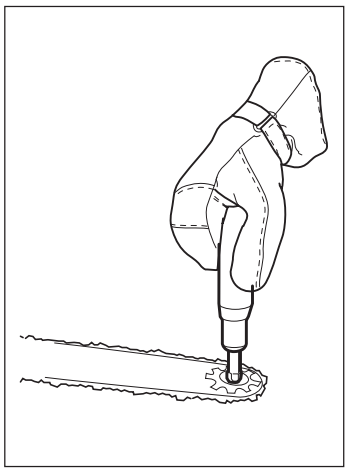

E Needle bearing maintenance

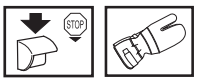

The clutch drum is equipped with one of the following chain sprockets:

- Spur sprocket (A) (the chain sprocket is welded on the drum)
- Rim sprocket (B) (exchangeable)

  Both versions have built-in needle bearing at the drive shaft, whitch has to be greased regularly (once a week).

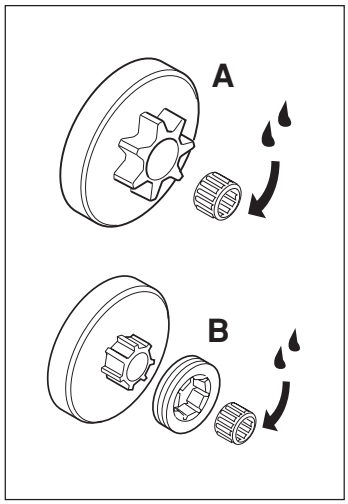

NOTE! Use only high quality bearing grease.

F Checking wear on cutting equipment

Saw chain

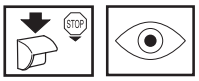

Check the saw chain daily for:
- Visible cracks in rivets and links.
- Whether the chain is stiff.
- Whether rivets and links are badly worn.

We recommend you compare the existing chain with a new chain to decide how badly it is worn.

When the length of the cutting teeth has worn down to only 4 mm the chain must be replaced.

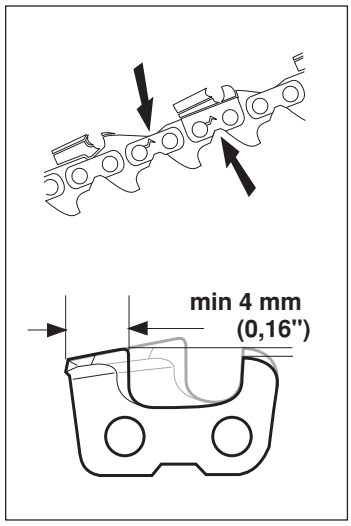

G Chain drive sprocket

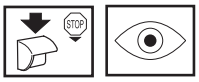

The clutch drum is fitted with one of the following drive sprockets:

A SPUR (integral drive sprocket)

B RING (replaceable)

Regularly check the degree of wear on the drive sprocket. Replace if wear is excessive.

Replace the drive sprocket whenever you replace the chain.

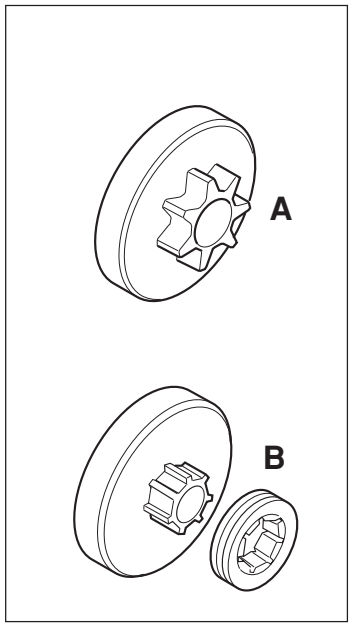

H Bar

Check regularly:

- Whether there are burrs on the edges of the bar. Remove these with a file if necessary.
- Whether the groove in the bar has become badly worn. Replace the bar if necessary.
- Whether the tip of the bar is uneven or badly worn. If a hollow forms on one side of the bar tip this is due to a slack chain.
- To prolong the life of the bar you should turn it over daily.

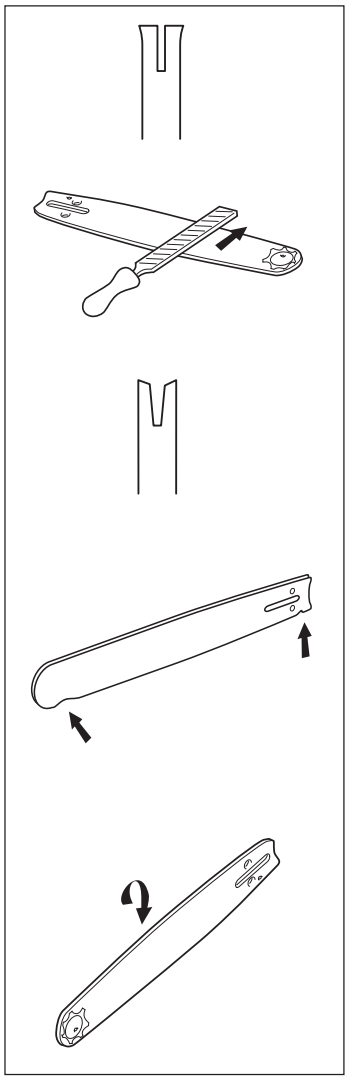

MOST CHAIN SAW ACCIDENTS HAPPEN WHEN THE CHAIN TOUCHES THE OPERATOR.

- **WEAR PERSONAL PROTECTIVE EQUIPMENT (see the section on *"Chain saw safety equipment"*).**
- **DO NOT TACKLE ANY JOB YOU ARE UNSURE OF (see the section on *"Personal protective equipment"*, *"How to avoid kickback"*, *"General working instructions"* and *"Cutting equipment"*).**
- **AVOID SITUATIONS WHERE THERE IS A RISK OF KICKBACK (see the section on *"Personal protective equipment"*).**
- **USE THE RECOMMENDED SAFETY EQUIPMENT AND CHECK ITS CONDITION (see section on *"General working instructions"*).**
- **CHECK THAT ALL SAFETY FUNCTIONS ARE WORKING (see section on *"General working instructions"* and *"General precautions"*).**

HOW TO AVOID KICKBACK

Kickback can happen very suddenly and violently; kicking the saw, bar and chain back at the user. If this happens when the chain is moving it can cause very serious, even fatal injuries. It is vital you understand what causes kickback and that you can avoid it by taking care and using the right working technique.

What is kickback?

The word kickback is used to describe the sudden reaction that happens when the upper quadrant of the tip of the bar (known as the "kickback zone") touches an object and the saw is kicked backwards.

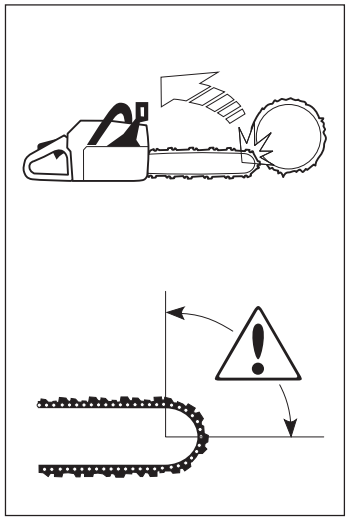

Kickback always occurs in the cutting plane of the saw. Normally the saw and bar are thrown backwards and upwards towards the user. However the saw may move in a different direction depending on the way it was being used when the kickback zone of the bar touched the object.

Kickback only occurs if the kickback zone of the bar touches an object.

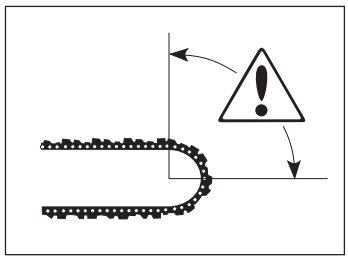

General rules

1 If you understand what kickback is and how it happens then you can reduce or eliminate the element of surprise. By being prepared you reduce the risk. Kickback is usually quite mild, but it can sometimes be very sudden and violent.

2 Always hold the saw firmly with your right hand on the rear handle and your left hand on the front handle.

Wrap your fingers and thumb around the handles. You should use this grip whether you are right-handed or left-handed. This grip minimises the effect of kickback and lets you keep the saw under control.

Do not let go of the handles!

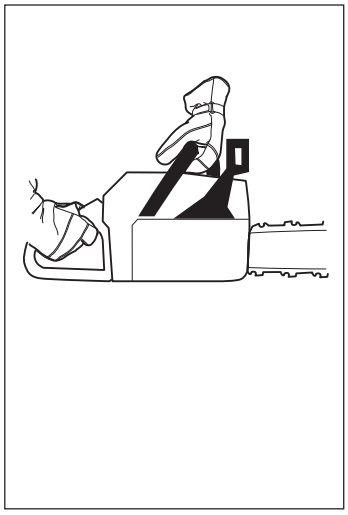

3 Most kickback accidents happen during limbing. Make sure you are standing firmly and that there is nothing in the way that might make you trip or lose your balance.

Lack of concentration can lead to kickback if the kickback zone of the bar accidentally touches a branch, nearby tree or some other object.

4 Never use the saw above shoulder height and try not to cut with the tip of the bar.

Never use the saw one-handed!

5 You must have a steady stance in order to have full control over the chain saw. Never work standing on a ladder, in a tree or where you do not have firm ground to stand on.

6 Always use a fast cutting speed, i.e. full throttle.

7 Take great care when you cut with the top edge of the bar, i.e. when cutting from the underside of the object. This is known as cutting on the push stroke. The chain tries to push the saw back towards the user.

Unless the user resists this pushing force there is a risk that the saw will move so far backwards that only the kickback zone of the bar is in contact with the tree. This will cause kickback.

Cutting with the bottom edge of the bar, i.e. from the top of the object downwards, is known as cutting on the pull stroke.

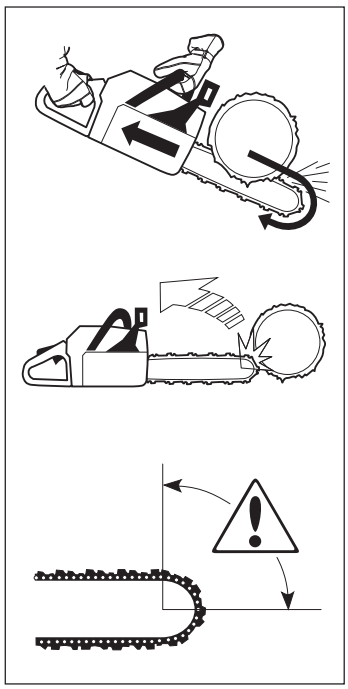

In this case the saw pulls itself towards the tree and the front edge of the saw provides a natural rest when cutting. Cutting on the pull stroke gives you better control over the saw and the position of the kickback zone.

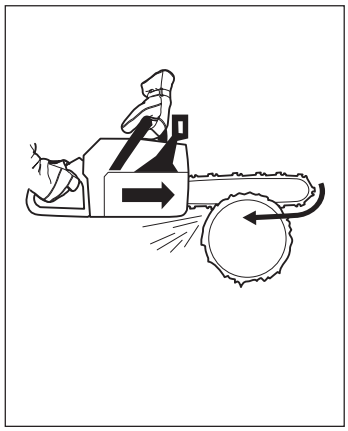

8 Follow the instructions on sharpening and maintaining your bar and chain. When you replace the bar and chain use only combinations that are recommended by us. See the sections on *"Cutting equipment"* and *"Technical data"*.

The risk of kickback is increased if you use the wrong cutting equipment or a chain that is not sharpened correctly. The wrong combination of bar and chain can increase the risk of kickback!

GENERAL SAFETY PRECAUTIONS

1 Chain saws are designed solely for cutting wood. The only cutting equipment that can be used with this chain saw are the combinations of bars and chains recommended in the *"Technical data"* section.

2 Never use a chain saw if you are tired, if you have drunk alcohol, or if you are taking medication that affects your vision, your judgement or your co-ordination.

WARNING!
Running an engine in a confined or badly ventilated area can result in death due to asphyxiation or carbon monoxide poisoning.

3 Always wear suitable safety clothing. See the section on *"Personal protective equipment"*.

4 Never use a chain saw that has been modified in any way from its original specification.

5a Never use a chain saw that is faulty. Carry out the regular checks, maintenance and service routines described in this manual. Some maintenance and service measures must be carried out by trained specialists. See the section on *"Maintenance"*.

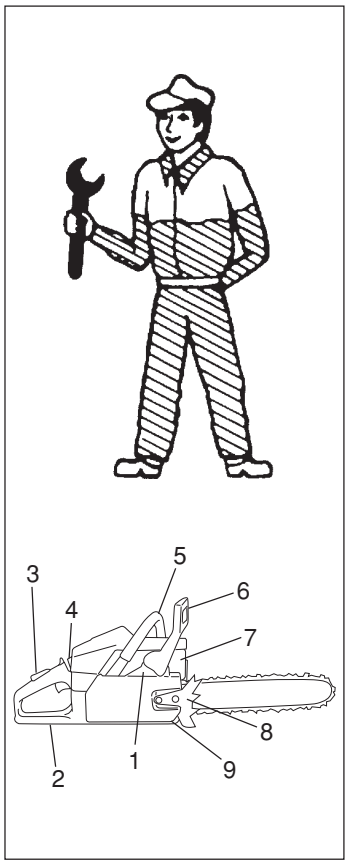

b Before use

1 Check that the chain brake works correctly and is not damaged. See the instructions under the heading Checking the chain brake.

2 Check that the rear right hand guard is not damaged.

3 Check that the throttle lock works correctly and is not damaged.

4 Check that the start and stop switch works correctly and is not damaged.

5 Check that all handles are free of oil.

6 Check that the anti vibration system works and is not damaged.

7 Check that the muffler is securely attached and not damaged.

8 Check that all parts of the chain saw are tightened correctly and that they are not damaged or missing.

9 Check that the chain catcher is in place and not damaged.

6 STARTING

Long term inhalation of the engine's exhaust fumes, chain oil mist and dust from sawdust can represent a health risk.

Never start a chain saw unless the bar, chain and all covers are fitted correctly.

The chain brake must be engaged when the chain saw is started. See the instructions under the heading Start. Never air drop start the chain saw. This method is extremely dangerous, as it is easy to lose control of the chain saw. See the instructions under the heading Start.

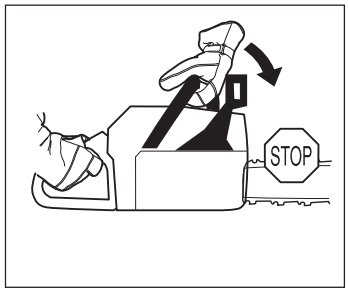

- Never start a chain saw unless the bar, chain and clutch cover are fitted correctly. (See section on *"Assembly"*).
- Never start a chain saw indoors. Exhaust fumes can be dangerous.
- Before starting the saw make sure there are no people or animals nearby who might be put at risk.
- Place the saw on the ground and hold the rear handle down with your right foot. Grasp the front handle firmly using your left hand. Make sure the chain saw is steady and the chain is not touching the ground. Then grasp the starter handle with your right hand and pull the starter cord. **Never twist the starter cord around your hand.**

7 FUEL SAFETY
(Refuelling, fuel mixture, storage.)

WARNING!
The catalytic converter muffler gets very hot during and after use. This also applies during idling. Be aware of the fire hazard, especially when handling the saw near flammable substances or vapours.

Fuel and fuel vapour are highly inflammable. Take care when handling fuel and chain oil. Keep away from naked flames and do not breathe in fuel vapour.

- Never try to refuel the saw while it is running.
- Make sure there is plenty of ventilation when refuelling or mixing fuel (2-stroke mixture).
- Move the saw at least 3 m from the refuelling point before starting it.
- Never start the chainsaw:
  a) If you have spilt fuel or chain oil on the saw. Wipe off the spill and allow remaining fuel to evaporate.
  b) If you spill fuel or chain oil on yourself or your clothes. Change your clothes.
  c) If there is a fuel leak. Check regularly for leaks from the FUEL CAP and FUEL LINES.

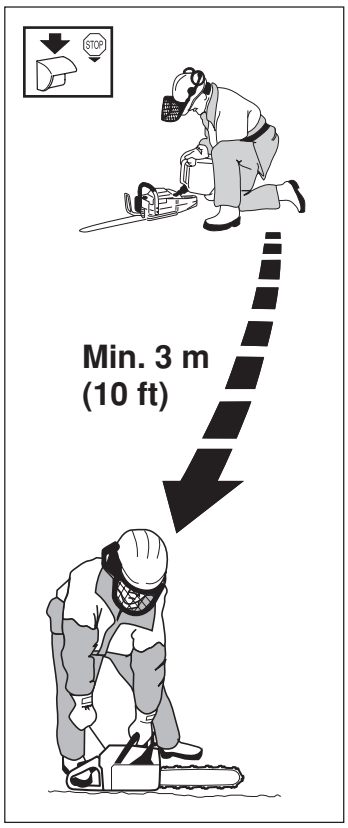

- Always store the chain saw and fuel away from any sources of sparks or naked flames, e.g. machines, electric motors, relays, switches, boilers, etc.
- Always store fuel in an approved container designed for that purpose.
- For longer periods of storage or for transport of the saw, the fuel and chain oil tanks should be emptied. Ask where you can dispose of waste fuel and chain oil at your local petrol station.

8 Never use any accessories other than those recommended in this manual. See the sections on *"Cutting equipment"* and *"Technical data"*.

The risk of accident is increased if you use the wrong cutting equipment or a chain that is not sharpened correctly. Using the wrong combination of bar and chain can increase the risk of accidents!

GENERAL WORKING INSTRUCTIONS

This section describes basic safety rules for using a chain saw. This information is never a substitute for professional skills and experience. If you get into a situation where you feel unsafe, stop and seek expert advice. Contact your chain saw dealer, service agent or an experienced chain saw user. DO NOT ATTEMPT ANY TASK THAT YOU FEEL UNSURE OF!

Important

1 Before using a chain saw you must understand the effects of kickback and what causes it. (See the section on *"How to avoid kickback"*.)

2 Before using a saw you must understand the difference between sawing with the top and bottom edges of the bar. (See the section on *"How to avoid kickback"*.)

1 Basic safety rules

1 Look around you:

- to make sure there are no people, animals or other objects nearby that might affect your work.
- to make sure that none of the above might come within reach of your saw or be injured by falling trees.

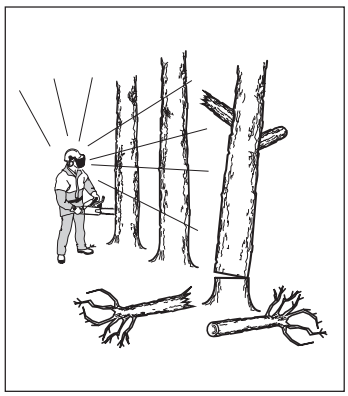

Follow the instructions above, but do not use a chain saw in a situation where you cannot call for help in case of an accident.

2 Do not use the saw in bad weather, such as dense fog, heavy rain, strong wind, intense cold, etc. Working in cold weather is tiring and often brings added risks, such as icy ground, unpredictable felling direction, etc.

3 Take great care when removing small branches and avoid cutting bushes (i.e. cutting many small branches at the same time). Small branches can be grabbed by the chain and thrown back at you, causing serious injury.

4 Check the area around you for possible obstacles such as roots, rocks, branches, ditches, etc., in case you have to move suddenly. Take great care when working on sloping ground.

5 Take the utmost care when cutting through branches or logs that are in tension. A log or branch that is in tension can suddenly spring back into its natural position before or after you cut it. If you stand on the wrong side or start cutting in the wrong place it may strike you or your chain saw. This could make you lose control and cause a serious accident.

6 Before moving your chain saw switch off the engine and lock the chain using the chain brake. Carry the saw with the bar and chain pointing backwards. Fit a guard to the bar before carrying the saw any distance.

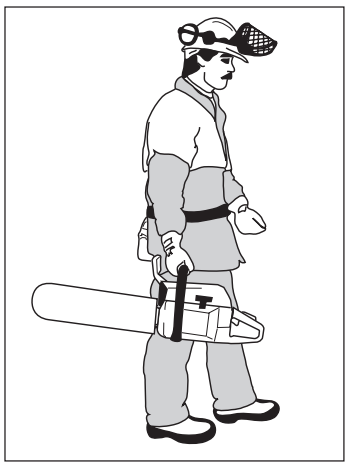

7 Never put a chain saw down while the engine is running unless you have it in clear view and the chain brake is on. Switch the engine off before leaving your chain saw for any length of time.

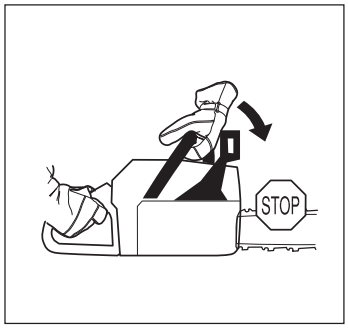

Never use a chain saw by holding it with one hand. A chain saw is not safely controlled with one hand; you can cut yourself. Always have a secure, firm grip around the handles with both hands.

2 Basic cutting technique

General

- **Always use full throttle when cutting!**
- **Reduce the speed to idle after every cut** (running the engine for too long at full throttle without any load can lead to serious engine damage).
- Cutting from above = Cutting on the pull stroke.
- Cutting from below = Cutting on the push stroke.

See the section on *"How to avoid kickback"* to find out why cutting on the push stroke increases the risk of kickback.

Terms:

Cutting	=	General term for cutting through wood.
Limbing	=	Cutting limbs off a felled tree.
Splitting	=	When the object you are cutting breaks off before the cut is complete.

There are five important factors you should consider before making a cut:

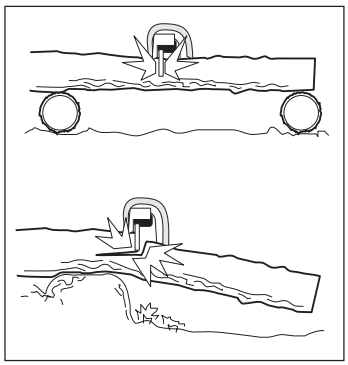

1 Make sure the bar will not jam in the cut.

2 Make sure the log will not split.

3 Make sure the chain will not strike the ground or any other object during or after cutting.

4 Is there a risk of kick-back?

5 Do the conditions and surrounding terrain affect your safety when working?

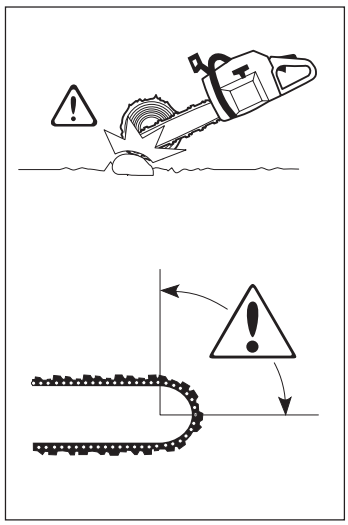

Two factors decide whether the chain will jam or the log will split. The first is how the log is supported and the second is whether it is in tension.

In most cases you can avoid these problems by cutting in two stages; from the top and from the bottom of the log. You need to support the log so that it will not trap the chain or split during cutting.

If the chain jams in the cut:
STOP THE ENGINE! Don't try to pull the saw free. If you do you may damage the chain when the saw suddenly breaks free. Use a lever to open up the cut and free the bar.

The following instructions describe how to handle most types of situation that you will be faced with when using a chain saw.

Cutting

1 The log is lying on the ground. There is little risk of the chain jamming or the log splitting. However there is a risk that the chain will touch the ground when you finish the cut.

Cut all the way through the log from above. Try not to touch the ground as you finish the cut. Maintain full throttle but be prepared in case the chain snatches.

A If it is possible to turn the log you should stop cutting about 2/3 of the way through.

B Turn the log and finish the cut from the opposite side.

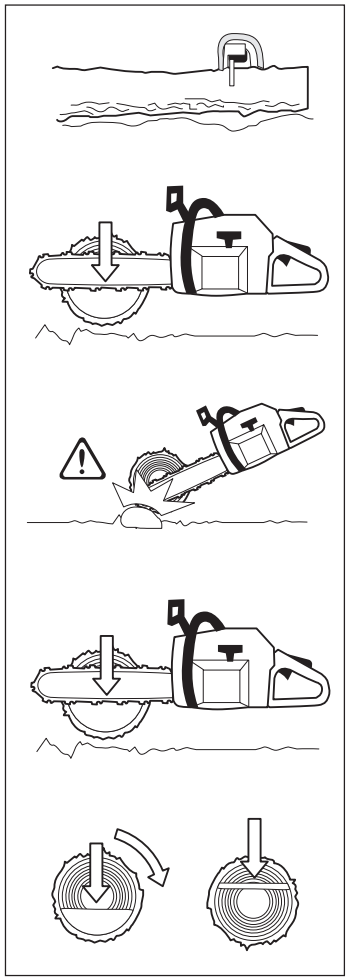

2 The log is supported at one end. There is a high risk that it will split.

A Start by cutting from below (about 1/3 of the way through).

B Finish by cutting from above so that the two cuts meet.

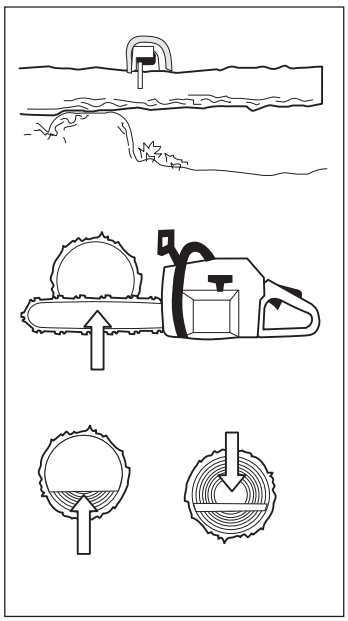

3 The log is supported at both ends. There is a high risk that the chain will jam.

A Start by cutting from above (about 1/3 of the way through).

B Finish by cutting from below so that the two cuts meet.

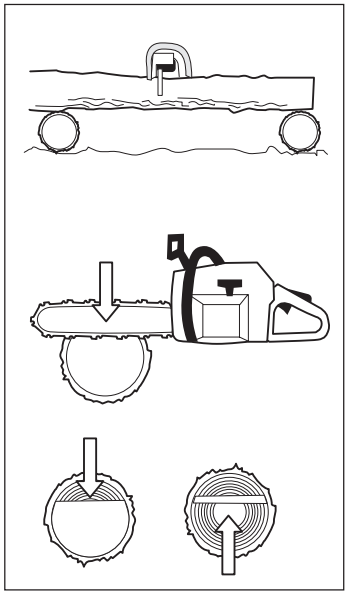

Limbing

When limbing thick branches you should use the same approach as for cutting.
Cut difficult branches piece by piece.

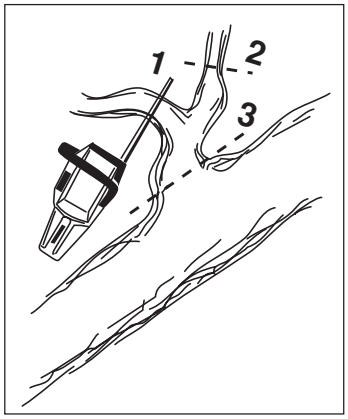

3 Tree felling technique

It takes a lot of experience to fell a tree. Inexperienced users of chain saws should not fell trees. NEVER ATTEMPT A TASK YOU ARE UNSURE OF.

A Safe distance

The safe distance between a tree that is to be felled and anyone else working nearby is at least 21/2 tree lengths.
Make sure that no-one else is in this “risk zone” before or during felling.

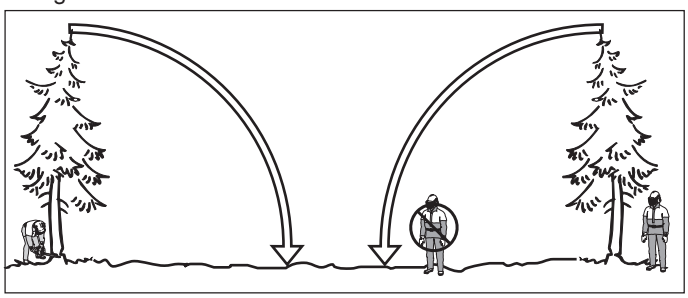

B Felling direction

The aim is to fell the tree in the best possible position for subsequent limbing and cross-cutting. You want it to fall on ground where you can move about safely.

The main point to avoid is letting the tree fall onto another tree. It can be both difficult and dangerous to remove a tree in such a position (see point 4 in this section).
Once you have decided which way you want the tree to fall you must judge which way the tree would fall naturally.

Several factors affect this:

- Lean of the tree
- Bend
- Wind direction
- Arrangement of branches
- Weight of snow

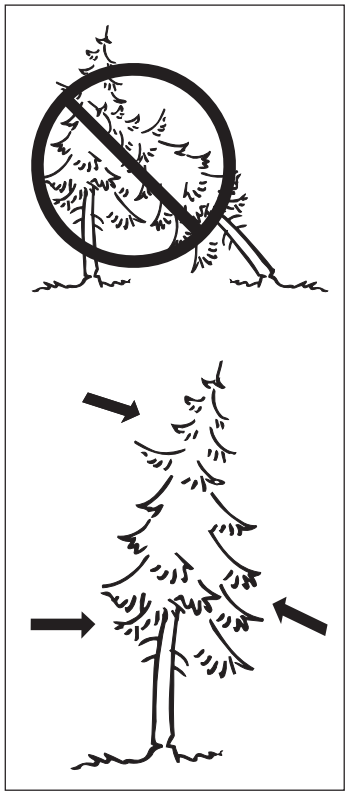

You may find you are forced to let the tree fall in its natural direction because it is impossible or dangerous to try to make it fall in the direction you first intended.

Another very important factor, which does not affect the felling direction but does affect your safety, is to make sure the tree has no damaged or dead branches that might break off and hit you during felling.

During critical felling operations, hearing protectors should be lifted immediately when sawing is completed so that sounds and warning signals can be heard.

C Clearing the trunk and preparing your retreat

Remove any branches that are in the way. To do this it is best to work from the top down and keep the trunk between you and the chain saw. Never limb above shoulder height.

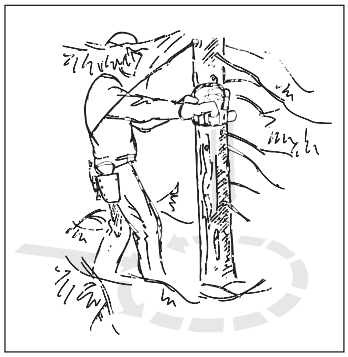

Remove any undergrowth from the base of the tree and check the area for obstacles (stones, branches, holes, etc.) so that you have a clear path of retreat when the tree starts to fall. Your path of retreat should be roughly 135 degrees behind the intended felling direction.

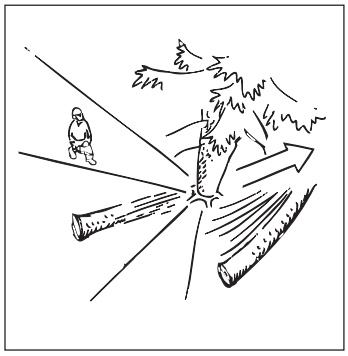

D Felling

Felling is done using three cuts. First you make the DIRECTIONAL CUTS, which consist of the TOP CUT and the BOTTOM CUT; followed by the FELLING CUT. By placing these cuts correctly you can control the felling direction very accurately.

DIRECTIONAL CUT

To make the DIRECTIONAL CUT you begin with the TOP CUT. Stand to the right of the tree and cut downwards at an angle.

Next make the BOTTOM CUT so that it finishes at the end of the TOP CUT.

The directional cut should run 1/4 of the diameter through the trunk and the angle between the TOP CUT and BOTTOM CUT should be 45°.

The line where the two cuts meet is called the DIRECTIONAL CUT LINE. This line should be perfectly horizontal and at right angles (90°) to the chosen felling direction.

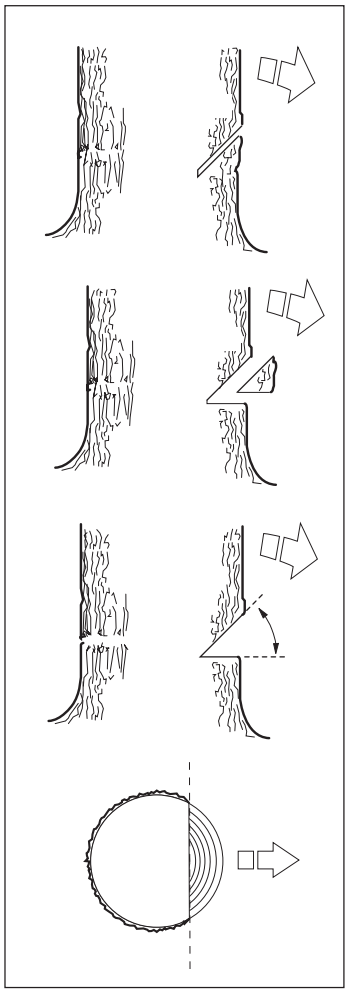

FELLING CUT

The felling cut is made from the opposite side of the tree and it must be perfectly horizontal. Stand on the left side of the tree and cut with the bottom edge of the bar.

Make the FELLING CUT about 3-5 cm (1.5-2 inches) above the flat section of the DIRECTIONAL CUT.

Set the spike bumper (if one is fitted) in behind the breaking strip. Use full throttle and bring the bar and chain slowly into the tree. Make sure the tree does not start to move in the opposite direction to your intended felling direction. Drive a WEDGE or BREAKING BAR into the cut as soon as it is deep enough.

Finish the FELLING CUT parallel with the DIRECTIONAL CUT LINE so that the distance between them is at least at least 1/10 of the trunk diameter. The uncut section of the trunk is called the BREAKING STRIP.

The BREAKING STRIP act as hinges that control the felling direction of the falling tree.

All control over the felling direction is lost if the BREAKING STRIP is too narrow or if the directional cut and felling cut are badly placed.

When the felling cut and directional cut are complete the tree should start to fall under its own weight or with the aid of a FELLING WEDGE or BREAKING BAR.

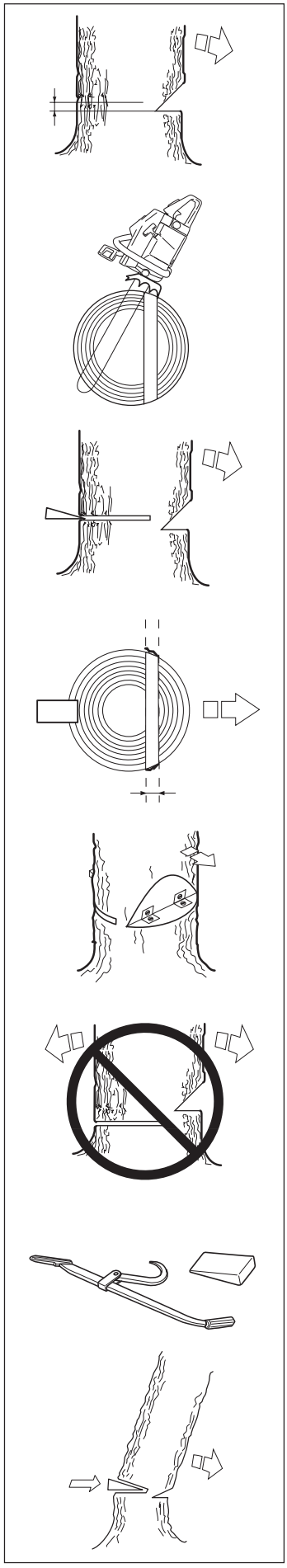

We recommend that you use a bar that is longer than the diameter of the tree, so that you can make the FELLING CUT and DIRECTIONAL CUT with single cutting stokes. (See *"Technical data"* to find out which lengths of bar are recommended for your saw).

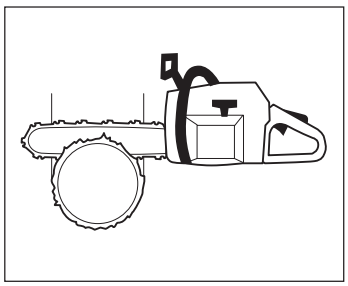

There are methods for felling trees with a diameter larger than the bar length. However these methods involve a much greater risk that the kickback zone of the bar will come into contact with the tree.

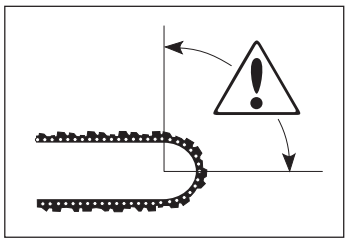

UNLESS YOU HAVE SPECIAL TRAINING WE ADVISE YOU NOT TO FELL TREES WITH A DIAMETER LARGER THAN THE BAR LENGTH OF YOUR SAW!

E Limbing

MOST KICKBACK ACCIDENTS HAPPEN DURING LIMBING!PAY CLOSE ATTENTION TO THE POSITION OF THE KICKBACK ZONE OF THE BAR WHEN YOU ARE LIMBING BRANCHES THAT ARE IN TENSION!

Make sure there are no obstacles in your way. Work on the left side of the trunk. Work close to the saw for maximum control. If possible, let the weight of the saw rest on the trunk.

Keep the tree between you and the saw as you move along the trunk.

F Cutting the trunk into logs

See chapter *"General working instructions"* point 2 *"Basic cutting technique"*.

4 Freeing a tree that has fallen badly = high accident risk

A Freeing a "Trapped tree"

The safest method is to use a winch.

A Tractor-mounted B Portable

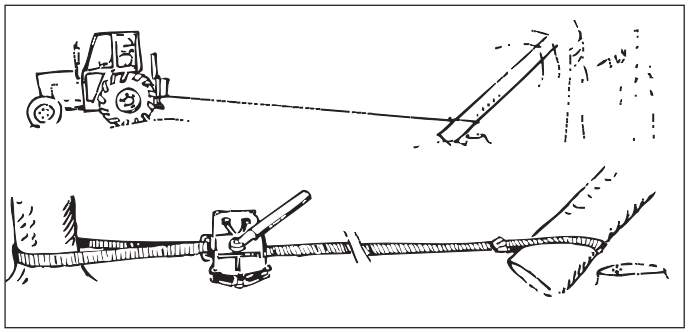

B Cutting trees and branches that are in tension Preparations:

a) Work out which way the tree or branch will move if released and where the natural "BREAKING POINT" is (i.e. the place it would break if it was bent even more).

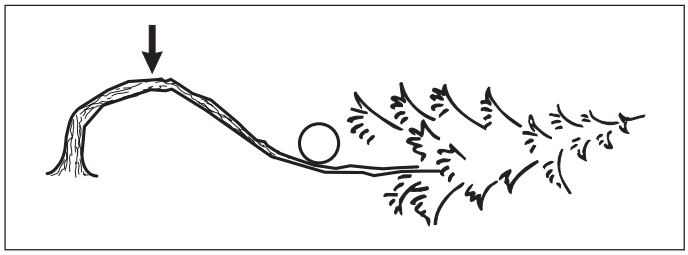

b) Decide which is the SAFEST way to release the tension and whether YOU are able to do it safely. In complicated situations the only safe method is to put aside your chain saw and use a winch.

General advice:

a) Position yourself so that you will be clear of the tree or branch when it springs free.

b) Make one or more cuts at or near the BREAKING POINT. Make as many cuts of sufficient depth as necessary to reduce the tension and make the tree or branch break at the BREAKING POINT.

Never cut straight through a tree or branch that is in tension!

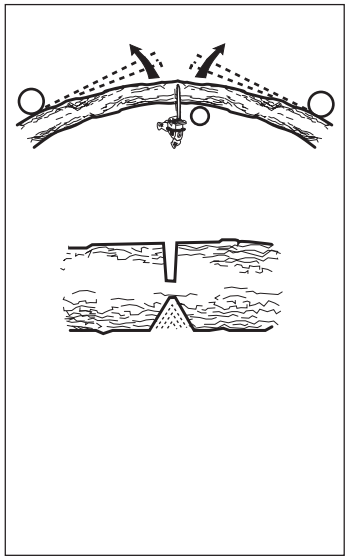

WHAT IS WHAT?

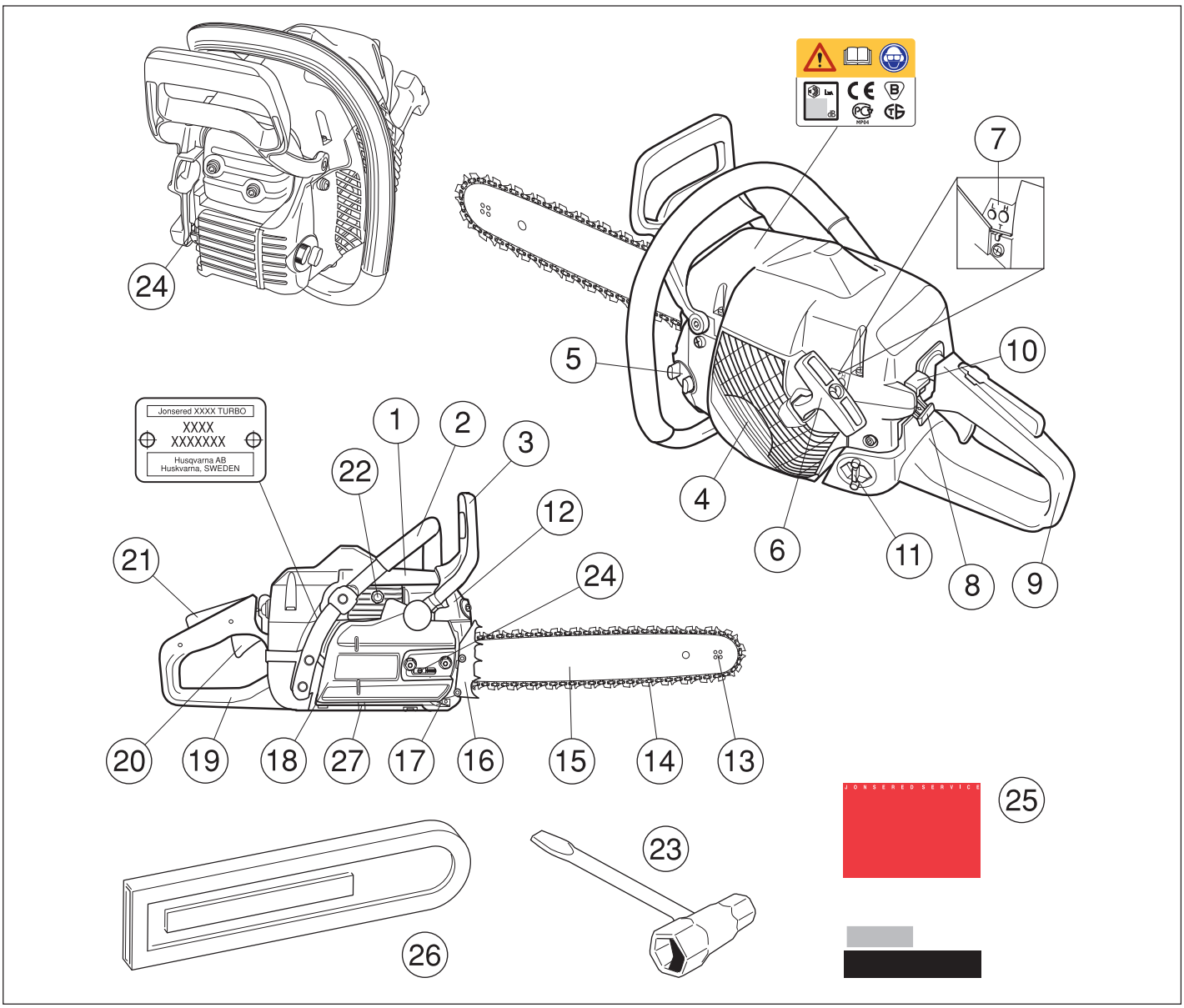

What is what?

1. Cylinder cover.
2. Front handle.
3. Front hand guard.
4. Starter cover.
5. Chain oil tank.
6. Starter handle.
7. Adjuster screw, carburettor.
8. Choke control/Start throttle lock.
9. Rear handle.
10. Stop switch. Ignition on/off switch.
11. Fuel tank.
12. Muffler.
13. Bar tip sprocket.
14. Saw chain.
15. Saw bar.
16. Bumper.
17. Chain catcher. Catches chain if it jumps or breaks.
18. Clutch cover.
19. Right hand guard. Protects right hand if chain breaks or jumps.
20. Throttle control.
21. Throttle lock. Prevents accidental operation of throttle control.
22. Decompression valve (2145, 2150).
23. Combination spanner.
24. Chain tensioning screw.
25. Operator´s manual.
26. Bar guard.
27. Oil pump adjustment screw.

Mounting guide bar and chain

Always wear gloves, when working with the chain, in order to protect your hands from injury.

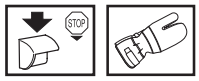

Check that the chain brake is in disengaged position by moving the front hand guard towards the front handle.

Take off the bar nuts and remove the clutch cover. Take off the transportation ring (A).

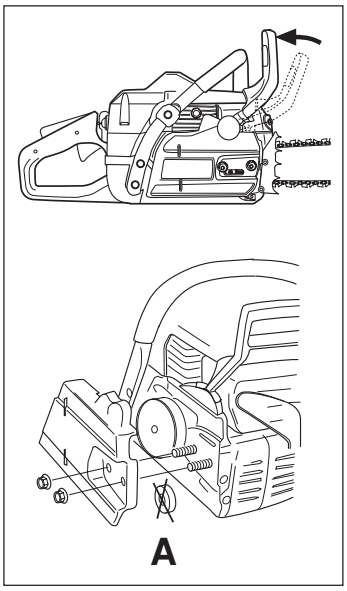

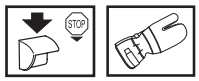

Fit the bar over the bar bolts. Place the bar in its rearmost position. Place the chain over the drive sprocket and in the groove on the bar. Begin on the top side of the bar. Make sure that the edges on the cutting links are facing forward on the top side of the bar.

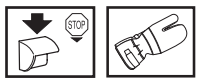

Fit the clutch cover and locate the chain adjuster pin in the hole on the bar. Check that the drive links of the chain fit correctly on the drive sprocket and that the chain is in the groove on the bar. Tighten the bar nuts finger tight.

Tension the chain by using the combination wrench. Turn the chain adjuster screw clockwise. The chain should be tensioned until it fits snugly on the underside of the bar.

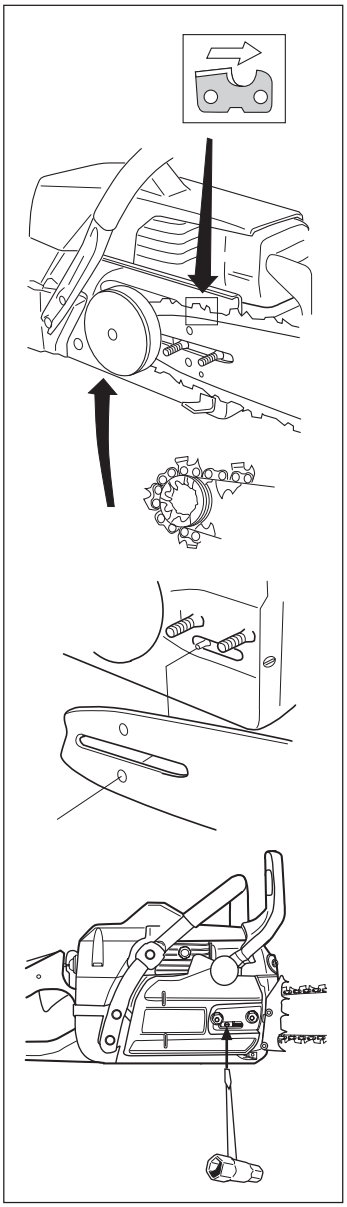

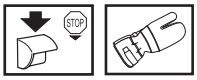

Hold up the tip of the bar and tighten the chain. The chain is correctly tensioned when there is no slack on the underside of the bar, but it can still be turned easily by hand. Hold up the bar tip and tighten the bar nuts with the combination wrench.

When fitting a new chain, the chain tension has to be checked frequently until the chain is run-in. Check the chain tension regularly. A correctly tensioned chain gives good cutting performance and long lifetime.

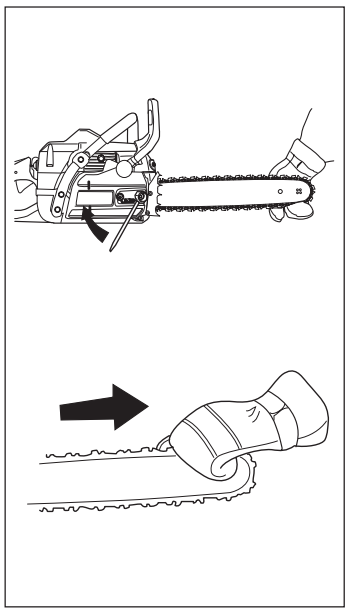

Fitting a spike bumper

To fit a spike bumper – contact your service agent.

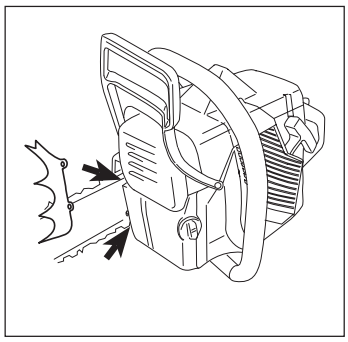

FUEL HANDLING

Fuelmix

IMPORTANT! The chain saw is equipped with a two-stroke engine and must always been run using a mixture of petrol and two-stroke engine oil. It is important to accurately measure the amount of oil to be mixed to ensure that the correct mixture is obtained. When mixing small amounts of fuel, even small inaccuracies can drastically affect the ratio of the mixture.

Always provide for good ventilation when handling fuel.

Petrol

- Use good quality unleaded or leaded petrol.
- The lowest octane recommended is 90.
- If you run the engine on a lower octane grade than 90 so-called, knocking can occur. This gives rise to a high engine temperature, which can result in serious engine damage.
- When working with continuous high revs (e.g. delimbing) a higher octane grade is recommended.

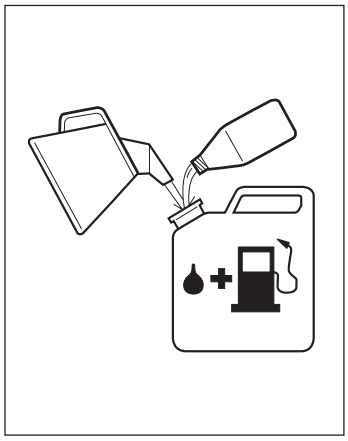

Two-stroke oil

- For the best results use JONSERED two-stroke oil, which is especially developed for chain saws. Mixing ratio 1:50 (2%).
- If JONSERED two-stroke oil is not available, you may use another two-stroke oil of good quality that is intended for air cooled engines. Contact your dealer when selecting an oil. Mixing ratio 1:33 (3%)-1:25 (4%).
- Never use two-stroke oil intended for water cooled outboard motors, so-called, outboard oil.
- Never use oil intended for four-stroke engines.

Gasolin Benzin Essence Gasolina Lit.	Oil • Öl Huile • Aceite Lit.		
	2%(1:50)	3%(1:33)	4%(1:25)
5	0,10	0,15	0,20
10	0,20	0,30	0,40
15	0,30	0,45	0,60
20	0,40	0,60	0,80
US gallon	US fl. oz.		
	2%(1:50)	3%(1:33)	4%(1:25)
1	2 1/2	3 3/4	5 1/8
2 1/2	6 1/2	9 3/4	12 7/8
5	12 7/8	19 1/4	25 3/4

Mixing

- Always mix the petrol and oil in a clean container intended for fuel.
- Always start by filling half the amount of the petrol to be used. Then add the entire amount of oil. Mix (shake) the fuel mixture. Add the remaining amount of petrol.
- Mix (shake) the fuel mixture thoroughly before filling the saw's fuel tank.
- Do not mix more than max. one month's supply of fuel.
- If the saw is not used for some time the fuel tank should be emptied and cleaned.

The following applies to saws with catalytic converter

Petrol

Always use high grade unleaded petrol (minimum 95 ROZ). Leaded petrol will destroy the catalytic converter and it will no longer serve its purpose.

Two-stroke oil

For best results and performance use Jonsered two-stroke oil, which is specially formulated for chain saws. Mixture 1:50 (2%).

WARNING!
The catalytic converter muffler gets very hot during and after use. This also applies during idling. Be aware of the fire hazard, especially when handling the saw near flammable substances or vapours.

For additional information about fuels, see above.

Chain oil

- The chain lubrication system is automatic. Always use special chain oil with good adhesive characteristics.
- In countries where no special chain oil is available, EP 90 transmission oil can be used.
- Never use waste oil. This results in damage to the oil pump, the bar and the chain.
- It is important to use oil of the right viscosity according to the air temperature.
- In temperatures below 0°C (32°F) some oils become too viscous. This can overload the oil pump and result in damage to the oil pump components.
- Contact your servicing dealer when choosing chain oil.

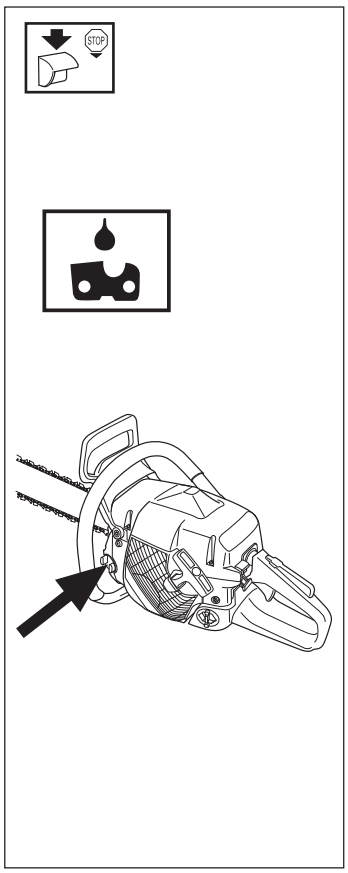

Fuelling

Taking the following precautions, will lessen the risk of fire.

- **Do not smoke or place warm objects in the vicinity of the fuel.**
- **Always shut off the engine before refuelling.**
- **Slowly open the fuel cap, when filling fuel, so that possible overpressure is slowly released.**
- **Tighten the fuel cap carefully after fuelling.**
- **Always move the saw from the fuelling area before starting.**

WARNING!
The catalytic converter muffler gets very hot during and after use. This also applies during idling. Be aware of the fire hazard, especially when handling the saw near flammable substances or vapours.

Clean around the fuel cap. Clean the fuel and chain oil tanks regularly. The fuel filter should be changed at least once a year. Contamination in the fuel tanks causes malfunction. Make sure the fuel is well mixed by shaking the container before fuelling. The volume of chain oil and fuel tanks are adjusted to each other. Therefore, always fill chain oil and fuel at the same time.

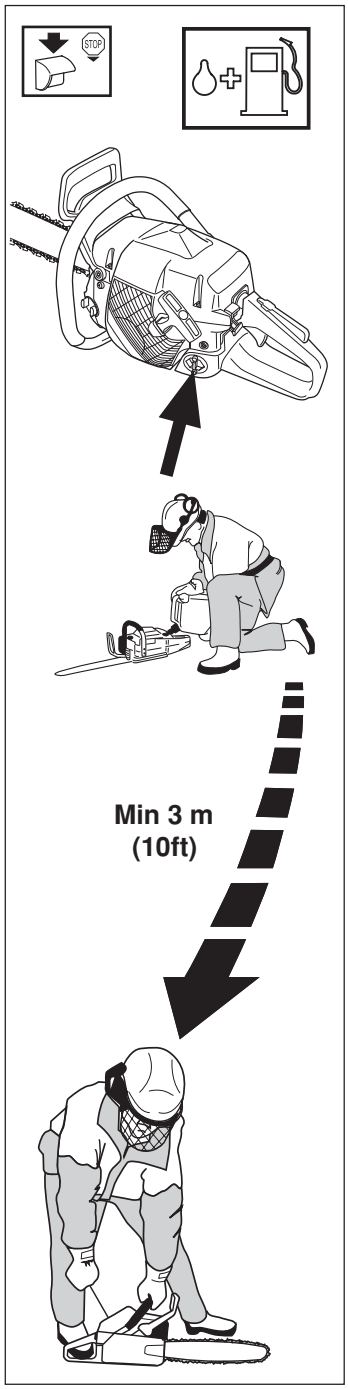

Start and stop

WARNING!

- **Never start a chain saw unless the bar, chain and all covers are fitted correctly. Otherwise the clutch can come loose and cause personal injuries.**
- **Always move the saw away from the fueling area before starting.**
- **Place the saw on clear ground and make sure that the chain is not contacting anything. Also, make sure that you have a secure footing.**
- **Keep people and animals well away from the working area.**

WARNING!
The catalytic converter muffler gets very hot during and after use. This also applies during idling. Be aware of the fire hazard, especially when handling the saw near flammable substances or vapours.

Cold engine

STARTING:
The chain brake must be engaged when the chain saw is started. Activate the brake by moving the front hand guard forwards.

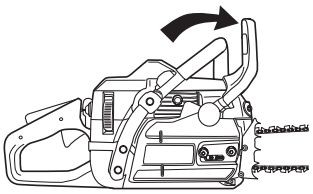

IGNITION; CHOKE:
Set the choke control in choke position. The stop contact will automatically be set to start position.

FAST IDLE:
Combined choke/fast idle is received when the choke is moved to choke position.

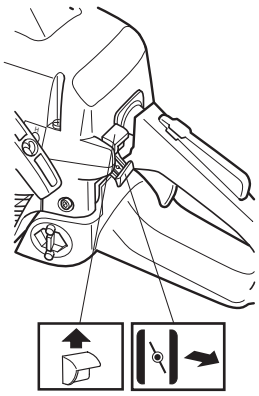

If the saw is fitted with a decompression valve (A):
Press the valve to reduce the pressure in the cylinder and make starting easier. Always use the decompression valve when starting the saw. Once the saw has started the valve will automatically return to its original setting.

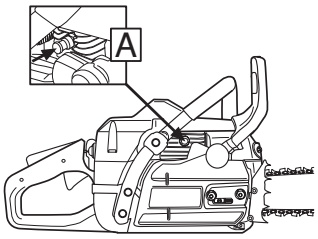

Warm engine

Use the same procedure as for starting cold engine but without choke. Fast idle is received by first set the choke control in choke position, and then back again.

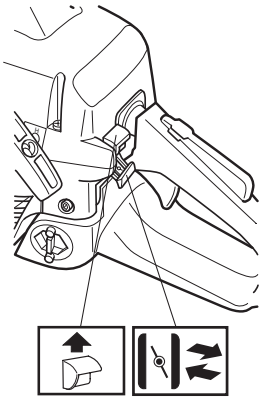

Start

Grip the front handle with your left hand and hold the saw down by putting your right foot in the rear handle. Pull the starter handle with your right hand and pull out the starter cord slowly until the starter pawls engage. Then pull sharply. **Never twist the starter cord around your hand.**

As the chain brake is still engaged the speed of the engine must be set to idling as soon as possible, this is achieved by quickly disengaging the throttle lock. This prevents unnecessary wear to the clutch, clutch drum and brake band.

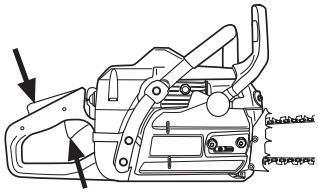

Push in the choke control immediately when the engine ignites and make repeated starting attemps. When the engine starts, rapidly give full throttle. Then the throttle latch will disengage.

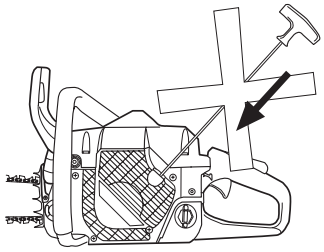

CAUTION! Do not release the starter handle from fully pulled out position as this can cause damage on the saw.

Reactivate the chain brake by pushing the front hand guard back towards the front handle. The chain saw is now ready for use.

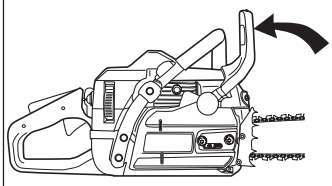

Stop

The engine is stopped by switching off the ignition.

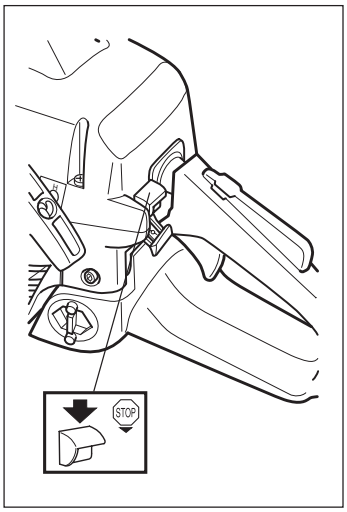

Carburettor

Functioning, Basic setting, Final setting

WARNING! Do not start the saw without the bar, chain and clutch cover (chain brake) assembled. If you do, the clutch might come loose and cause severe injuries.

Operation

- The carburettor governs the engine speed via the throttle. Air/fuel are mixed in the carburettor. The air/fuel mixture is adjustable. To take advantage of the saw's maximum output the setting must be correct.
- **The satisfactory operation of a catalytic converter depends, among other factors, on the correct adjustment of the carburettor. Follow carefully the instructions below, using a tachometer to check engine speed.**
- Adjusting the carburettor means the engine is adapted to local operating conditions, e.g. climate, altitude, petrol and the type of 2-stroke oil used.
- The carburettor has three adjustment possibilities:
  L = Low speed jet.
  H = High speed jet.
  T = Adjustment screw for idling.

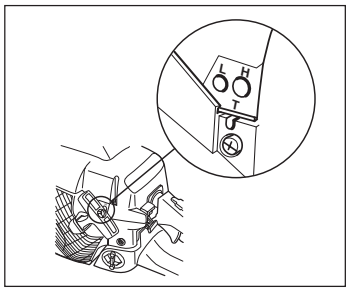

- The fuel quantity required in relation to the air flow, provided by opening the throttle, is adjusted by the L and H-jets. If they are screwed clockwise the air/fuel ratio becomes leaner (less fuel) and if they are turned anti-clockwise the ratio becomes richer (more fuel). A leaner mixture gives a higher engine speed and a richer mixture give a lower engine speed.
- The T screw regulates the idling speed. If the screw T is turned clockwise this gives a higher idling speed; anti-clockwise a lower idling speed.

WARNING! The catalytic converter muffler gets very hot during and after use. This also applies during idling. Be aware of the fire hazard, especially when handling the saw near flammable substances or vapours.

Basic setting and running in

The carburettor is adjusted to a basic setting when the saw is tested at the factory. **The basic setting is: H = 1 turn respective L = 1 turn.**

To provide the engine's components with a good level of lubrication (running in) the carburettor should be set for a richer fuel mixture for the first 3-4 hours of operating. To obtain this adjust the speed 600-700 rpm under the recommended max. speed.
If you do not have the possibility to check the speed using a tachometer the H-jet should not be set for a leaner mixture than that stated for the basic setting.
The recommended speed should not be exceeded.
NOTE! If the chain rotates while idling the T screw should be adjusted anti-clockwise until it stops.

Fine adjustment

- When the saw has been "run-in" the carburettor should be finely adjusted. **The fine adjustment should be carried out by qualified person.** First adjust the L-jet, then the idling screw T and then the H-jet. **The following engine speed applies:**

	Max. speed	Idling speed
2141	**12 500 rpm**	**2 700 rpm**
2145	**12 500 rpm**	**2 700 rpm**
2150	**12 500 rpm**	**2 700 rpm**

Changing the type of fuel

Fine tuning may be required if the chain saw, after changing the type of fuel, performs differently with regard to starting, acceleration, max. speed, etc.

Conditions

- Before any adjustments are made the air filter should be clean and the cylinder cowling fitted. Adjusting the carburettor while a dirty air filter is in use will result in a leaner mixture when the filter is finally cleaned. This can give rise to serious engine damage.
- Carefully turn the L and H-jets clockwise to the bottom. Now turn the jets one turn anti-clockwise. The carburettor is now set to H = 1 and L = 1.
- Now start the saw according to the starting instructions and run it warm for 10 minutes.
  NOTE! If the chain rotates the T screw should be turned anti-clockwise until the chain stops.
- Place the saw on a flat surface so that the bar points away from you and so that the bar and chain do not come into contact with the surface or other objects.

Low speed needle L

Try to find the highest idling speed, turning the low speed needle L clockwise respectively counter-clockwise. When the highest speed has been found, turn the low speed needle L 1/4 turn counter-clockwise.
NOTE! If the chain rotates in the idling position, turn the idling speed screw counter-clockwise until the chain stops.

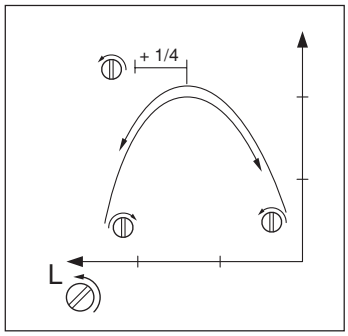

Final setting of the idling speed T

Adjust the idling speed with the screw T. If it is necessary to re-adjust, first turn the idle speed adjusting screw T clockwise, until the chain starts to rotate. Then turn, counter-clockwise until the chain stops. A correctly adjusted idle speed setting occurs when the engine runs smoothly in every position. It should also be good margin to the rpm when the chain starts to rotate.

Contact your servicing dealer, if the idle speed setting cannot be adjusted so that the chain stops. Do not use the saw until it has been properly adjusted or repaired.

High speed needle H

The high speed needle H influences the power of the saw. A too lean adjusted high speed needle H (high speed needle H closed too much) gives overrevs and damages the engine. Let the saw run at full speed for about 10 seconds. Thereafter, turn the high speed needle H 1/4 turn counter-clockwise.
Let the saw run again at full speed for about 10 seconds and note the difference of the enginesound.

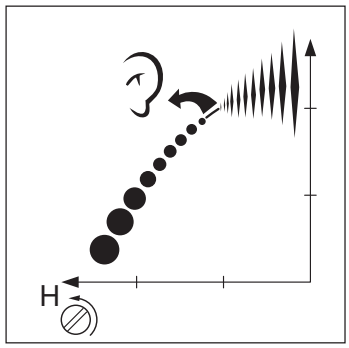

Repeat this procedure with the high speed needle H turned 1/4 turn more counter-clockwise. The saw has now been tested with the following settings: H=±0, H=+1/4, H=+1/2 from basic adjustment. At full speed the engine has produced a different sound for each setting. The high speed needle H is correctly set when the saw "4-cycles" a little. If the saw "whistles" the setting is too lean. If there is too much exhaust gas at the same time as the saw "4-cycles" much, the setting is too rich. Turn the high speed needle H until the setting sounds correct. **NOTE! For optimum setting of the carburettor, contact a qualified servicing dealer who has a revolution counter at his disposal. The maximum speed recommended must not be exceeded.**

Correctly adjusted carburettor

A correctly adjusted carburettor means that the saw accelerates without hesitation and the saw 4-cycles a little at max speed. Furthermore, the chain must not rotate at idling. A too lean adjusted low speed needle L may cause starting difficulties and bad acceleration. A too lean adjusted high speed needle H gives lower power=less capacity, bad acceleration and/or damage to the engine. A too rich adjustment of the two speed needles L and H gives acceleration problems or too low working speed.

Starter device

WARNING!

- **When the recoil spring is assembled in the starter housing, it is in tensioned position and can when treated carelessly, pop out and cause injuries.**
- **Always be careful, when changing the recoil spring or the starter cord. Always wear safety goggles for eye protection.**

Changing a broken or worn starter cord

- Loosen the screws, that hold the starter device against the crankcase and remove the starter device.

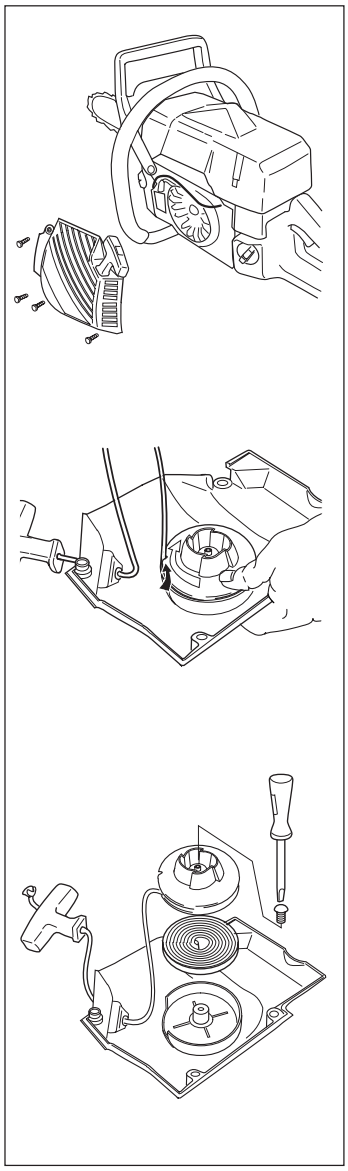

- Pull out the cord approx. 30 cm and lift it up into the notch in the pulley. Zero-set the recoil spring by letting the pulley rotate slowly backwards. Undo the screw in the centre of the pulley and remove the pulley.

- Insert and fasten a new starter cord in the pulley. Wind approx. 3 turns of the starter cord on to the pulley. Assemble the starter pulley against the recoil spring, so the end of the spring engages to the pulley. Fit the screw in the centre of the pulley. Carry the starter cord through the hole in the starter housing and the starter handle. Make a knot on the starter cord.

Tensioning the recoil spring

- Lift the starter cord up in the notch on the starter pulley and turn the starter pulley 2 turns clockwise.

  NOTE! Check that the starter pulley can be turned at least half a turn, when the starter cord is entirely pulled out.

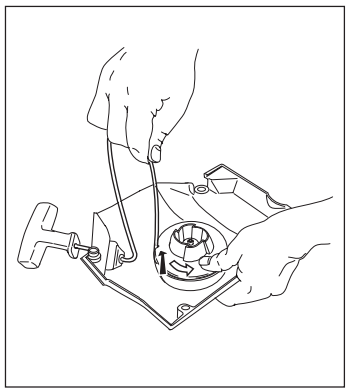

Changing the broken recoil spring

- Lift the starter pulley (see *"Changing a broken or worn starter cord"*).

- Dissasemble the recoil spring by tapping the pully (with its inside facing down) lightly against a working bench or similar. If the spring pops out when assembling, it should be mounted again, out and in towards the centre.

- Lubricate the recoil spring with thin oil. Assemble the starter pulley, and tension the recoil spring.

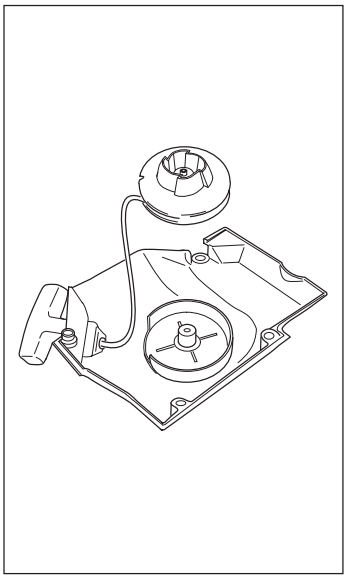

Starter device assembly

- Assemble the starter device, by pulling the starter cord out first, then place the starter against the crankcase. Then slowly release the starter cord so that the pulley engages with the pawls.

- Assemble and tighten the screws, which hold the starter.

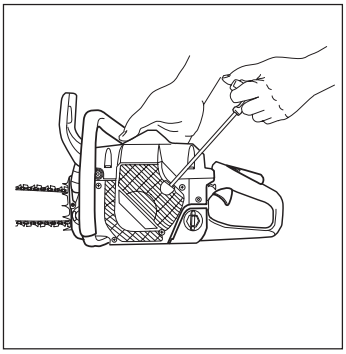

Air filter

The air filter must be regularly cleaned from dust and dirt in order to avoid:

- Carburettor malfunctions
- Starting problems
- Engine power reduction
- Unnecessary wear on the engine parts
- Abnormal fuel consumption

Clean the air filter daily or more often if the air is exceptionally dusty in the working area.

- Disassemble the air filter by removing the cylinder cover and unscrew the filter. When reassembling, make sure that the filter is tight against the filter holder. Clean the filter by brushing or shaking it.
- A more thorough cleaning of the filter is obtained by washing it in water and soap.

An air filter, which is used for some time, cannot be cleaned completely. Therefore it must be replaced by a new one, with regular intervals.
IMPORTANT! A damaged air filter must always be replaced.

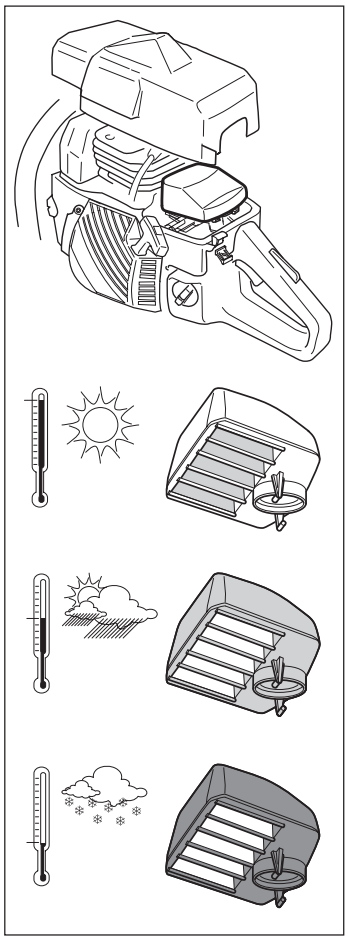

A Jonsered chain saw can be equipped with different types of airfilter according to working and weather conditions, season etc.

Spark plug

The spark plug condition is influenced by:

- An incorrect carburettor setting.
- Wrong fuel mixture (too much oil in the petrol).
- A dirty air filter.

These factors cause deposits on the spark plug electrodes, which may result in malfunction and starting difficulties.

If the engine is low on power, difficult to start or runs poorly at idling speed, always check the spark plug first. If the spark plug is dirty, clean it and check the electrode gap. Readjust if necessary. The correct gap is 0,5 mm (0,020"). The spark plug should be replaced after about a month in operation or earlier if the electrodes are badly eroded.

IMPORTANT! Always use the recommended spark plug type. An incorrect spark plug can severely damage the piston/cylinder.

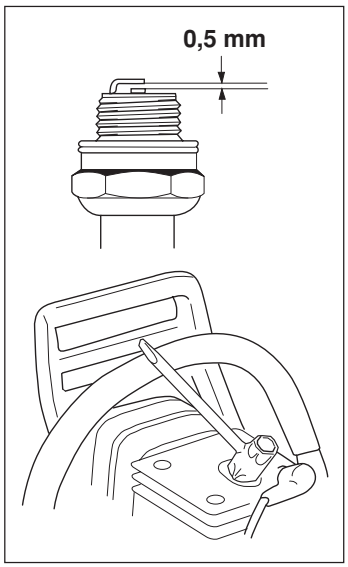

Muffler

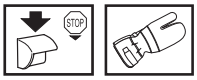

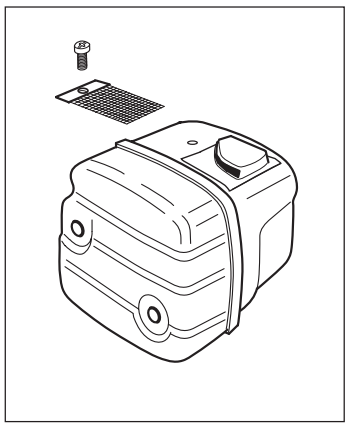

The muffler is designed in order to reduce the noise level and to direct the exhaust gases away from the operator. The exhaust gases are hot and can contain sparks, which may cause fire if directed against dry and combustible material. Some mufflers are equipped with a special screen.
If your saw has this type of muffler, you should clean the screen at least once a week. This is done with a wire brush.

CAUTION! The screen must be replaced, if damaged. The saw will be overheated, if the screen is clogged. This results in damage on the cylinder and the piston. Never use a saw with a clogged or defective muffler.

A muffler fitted with a catalytic converter greatly reduces the concentration of hydrocarbons (HC), oxides of nitrogen (NO) and aldehydes emitted with exhaust gases. However, it does not cut down carbon monoxide (CO), which you cannot smell! Consequently, never work in an enclosed or badly ventilated area. Good air circulation should always prevail when working in snowy hollows, ravines or in confined conditions.

WARNING!
The catalytic converter muffler gets very hot during and after use. This also applies during idling. Be aware of the fire hazard, especially when handling the saw near flammable substances or vapours.

Needle bearing maintenance

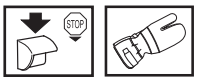

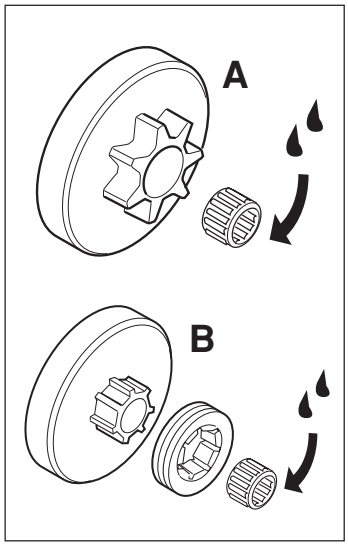

The clutch drum is equipped with one of the following chain sprockets:

- Spur sprocket (A) (the chain sprocket is welded on the drum)
- Rim sprocket (B) (exchangeable)

Both versions have built-in needle bearing at the drive shaft, whitch has to be greased regularly (once a week).

NOTE! Use only high quality bearing grease.

Adjustment of the oil pump

The oil pump is adjustable. Adjustments are made by turning the screw using a screwdriver or combination spanner. The saw is supplied from the factory with the screw set to position 2. Turning the screw clockwise will reduce the oil flow and turning the screw anti-clockwise will increase the oil flow.

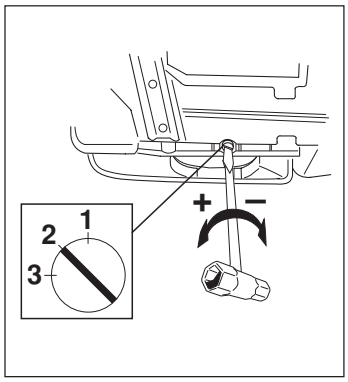

WARNING! The engine must not be running when making adjustments.

Recommended settings:
Bar 13"-15": Position 1
Bar 15"-18": Position 2
Bar 18"-20": Position 3

Cooling system

To obtain the lowest possible running temperature the saw is equipped with a cooling system.

The cooling system consists of:

1. Air intake on the starter unit.
2. Air guide plate.
3. Fan blades on the flywheel.
4. Cooling fins on the cylinder.
5. Cylinder cowling (supplies cold air over the cylinder).

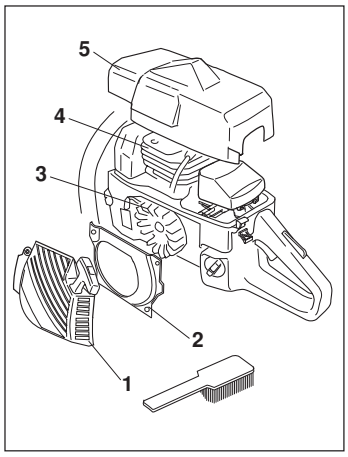

Clean the cooling system with a brush once a week, more often in demanding conditions. **A dirty or blocked cooling system results in the saw overheating which causes damage to piston and cylinder.**
NOTE! The cooling system of chain saws that are fitted with a catalytic converter must be cleaned daily. This is particularly important on saws with catalytic converters, because the higher working temperature of the exhaust demands efficient cooling of the engine and the catalytic converter unit.

Centrifugal cleaning ”Turbo”

Centrifugal cleaning means the following:
All air to the carburettor is carried through the starter. Dirt and dust is centrifuged away by the cooling fan.

IMPORTANT! In order to keep the function of the centrifugal cleaning, a continous maintenance and care must be made.

- Clean the air intake to the starter, the fan wings of the flywheel, the space around the flywheel, inlet pipe and carburettor space.

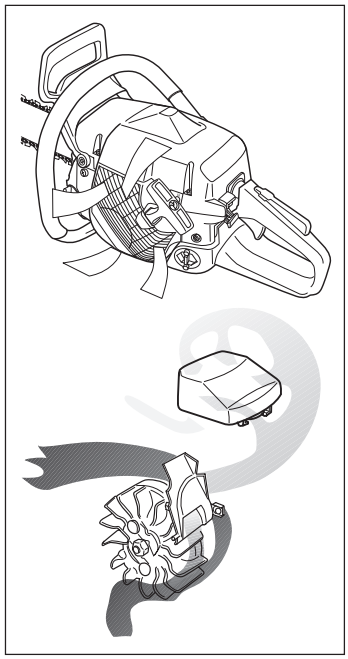

Winter use

During winter time, snow and cold weather can cause running problems, such as:
- Too low engine temperature.
- Icing of the air filter and freezing of the carburettor.

Therefore some special measures are required:
- Partly reduce the air inlet of the starter and by doing that increase the engine temperature.
- Preheat the intake air to the carburettor by using the heat from the cylinder.

Temperature 0°C (32°F) or colder:
The cylinder cover is made so it can be adjusted for running in cold weather. Open the winter flap so that preheated air from the cylinder can pass into the carburettor area preventing for instance icing of the air filter.

For temperatures below -5°C (23°F) and/or in snow conditions there is also:
- a special cover (A) for the starter housing,
- a winter plug (B) for the air intake that is fitted as shown.

These reduce the air flow and prevent large amounts of snow from being sucked into the carburettor chamber. NOTE! When the winter plug is fitted the winter flap must be open.

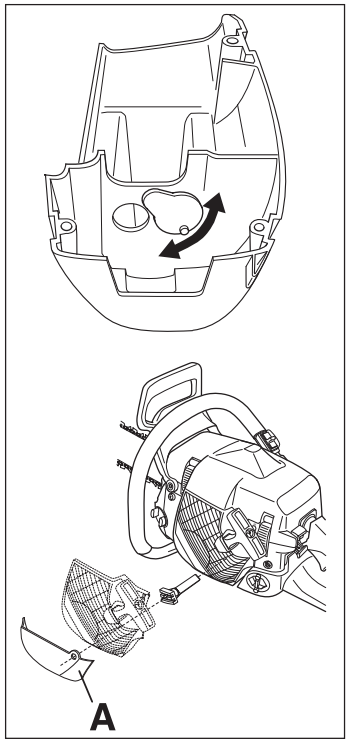

IMPORTANT! If the temperature rises above -5°C (23°F) or 0°C (32°F) respectively the saw MUST be restored to its normal settings. Otherwise there is a risk of overheating, which can cause severe engine damage.

IMPORTANT! Any maintenance other than that described in this manual must be carried out by your servicing dealer.

MAINTENANCE

Below you will find some general maintenance instructions.
If you have more questions, contact your servicing dealer.

Daily maintenance

1. Check the throttle trigger for smooth operation. If any binding occurs, or if engine fails to return to idle, the saw should be taken to your dealer, before it is used again. Also, be sure that the trigger cannot be pulled until the throttle trigger lockout is depressed.
2. Clean the chain brake and check its function according to the instructions. Make sure that the chain catcher is undamaged. Otherwise replace it immediately.
3. Clean or replace the air filter as necessary. Check for damage or holes.
4. The bar should be turned daily for more even wear. Check the lubrication hole in the bar, to be sure it is not clogged. Clean the bar groove, if the bar has a sprocket tip, this should be lubricated.
5. Check the function of the oiler to be sure the bar and chain receive proper lubrication.
6. Sharpen the chain and check its tension and condition. Check the drive sprocket for wear. Replace if necessary.
7. Check the starter and starter cord for wear or damage. Clean the air intake slots on the starter housing.
8. Check for any loose nuts and screws and retighten if necessary.
9. Test the stop switch to be sure it shuts off the engine.
10. Check the cooling system of saw fitted with catalytic converter.

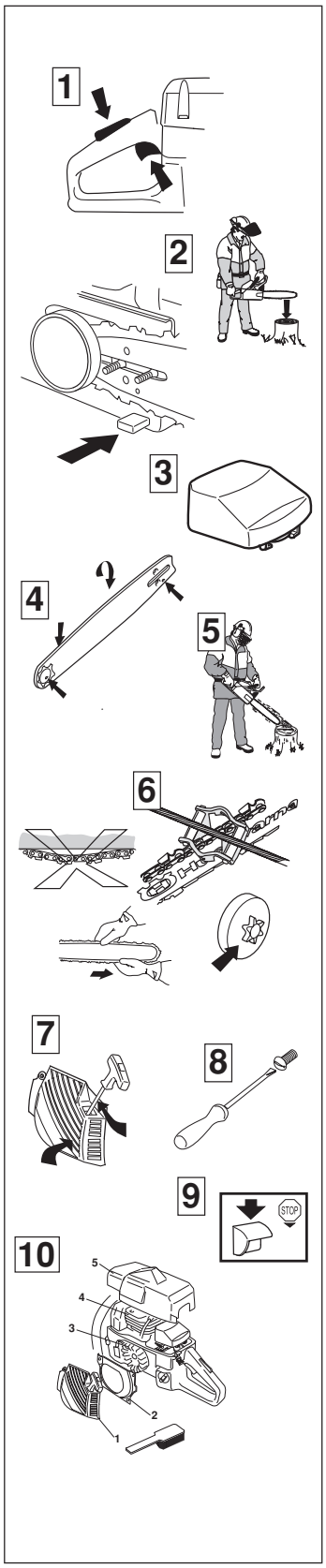

Weekly maintenance

1. Check that the AV elements are not soft or torn.
2. Lubricate the clutch drum bearing.
3. File off burrs, if any, on the sides of the bar.
4. Clean the spark plug and check the gap.
   The correct gap is 0,5 mm (0,020 inch).
5. Check the starter and the recoil spring. Clean the fins on the flywheel.
6. Clean the cooling fins on the cylinder.
7. Clean or change the screen in the muffler.
8. Clean the carburettor body and air box.

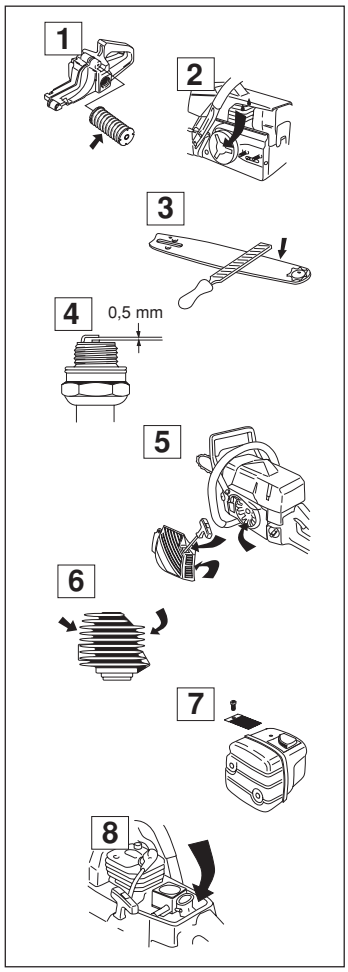

Monthly maintenance

1. Check the brake band on the chain brake for wear.
2. Check the clutch centre, clutch drum and clutch spring for wear.
3. Clean the outside of the carburettor.
4. Check the fuel filter. Change if necessary.
5. Clean the inside of the fuel tank.
6. Clean the inside of the oil tank.
7. Check all cables and connections.

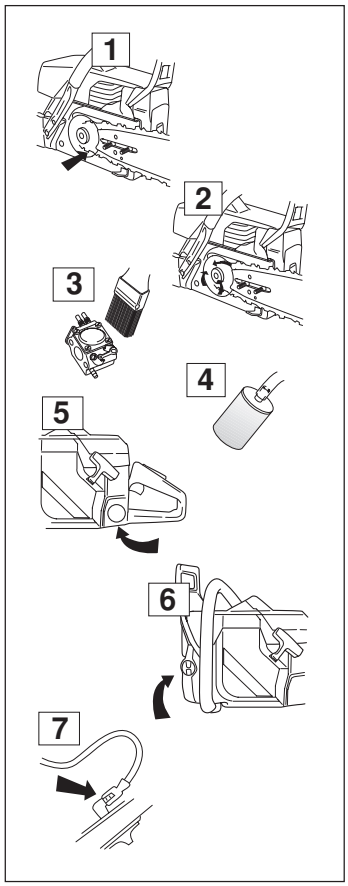

TECHNICAL DATA

	2141	2145	2150
Engine			
Cylinder volume, cu.in/cm^3	40,8	45,0	49,4
Cylinder bore, inch/mm	40,0	42,0	44,0
Stroke, inch/mm	32,5	32,5	32,5
Idle speed, rpm	2 700	2 700	2 700
Recommended max. speed, unloaded, rpm	12 500	12 500	12 500
Power, kW/ rpm	2,0/ 9 000	2,2/ 9 000	2,3/ 9 000
Ignition system			
Manufacture	FHP	FHP	FHP
Type of ignition system	CD	CD	CD
Spark plug	NGK BPMR 7A Champion RCJ 7Y	NGK BPMR 7A Champion RCJ 7Y	NGK BPMR 7A Champion RCJ 7Y
Electrode gap, inch/mm	0,5	0,5	0,5
Fuel and lubrication system			
Manufacturer	Walbro	Walbro	Walbro
Carburettor type	HDA 154B	HDA 154B	HDA 154B
Fuel capacity, US pint/litre	0,5	0,5	0,5
Oil pump capacity at 8500 rpm, ml/min	9	9	5-10
Oil capacity, US pint/litre	0,25	0,25	0,25
Type of oil pump	Automatic	Automatic	Automatic
Weight			
Without bar and chain, LBS/kg	4,9	4,9	4,9
Noise emissions			
(see note 1)			
Sound power level, measured dB(A)	112	112	111
Sound power level, guaranteed L_{WA} dB(A)	113	113	113
Sound levels			
(see note 2)			
Equivalent sound pressure level at operator's ear, measured according to relevant international standards, dB(A)	101	101	102
Vibration levels			
(see note 3)			
Front handle m/s^2	3,2	3,2	3,2
Rear handle m/s^2	4,0	4,0	4,0
Chain/bar			
Standard bar length, inches/cm	13"/33	13"/33	13"/33
Recommended bar lengths, inches/cm	13-18"/33-46	13-18"/33-46	13-18"/33-46
Usable cutting length, inches/cm	12-17"/31-43	12-17"/31-43	12-17"/31-43
Chain speed at max. power, m/sec	17,3	17,3	17,3
Pitch, inch/mm	0,325"/8,25	0,325"/8,25	0,325"/8,25
Thickness of drive link, inch/mm	0,050"/1,3 0,058"/1,5	0,050"/1,3 0,058"/1,5	0,050"/1,3 0,058"/1,5
Number of teeth on drive sprocket	7	7	7

Note 1: Noise emissions in the environment measured as sound power (L_{WA}) in conformity with EC directive 2000/14/EC.

Note 2: Equivalent sound pressure level, according to ISO 7182, is calculated as the time-weighted energy total for sound pressure levels under various working conditions with the following time distribution: 1/3 idling, 1/3 max. load, 1/3 max. speed.

Note 3: Equivalent vibration level, according to ISO 7505, is calculated as the time-weighted energy total for vibration levels under various working conditions with the following time distribution: 1/3 idling, 1/3 max. load, 1/3 max. speed.

Bar and chain combinations

The following combinations are CE approved.

Bar			Chain
Length, inches	Pitch, inches	Max. tip radius	
13	0,325	10T	Jonsered S30
15	0,325	10T	Jonsered S30
16	0,325	10T	Jonsered S30
18	0,325	10T	Jonsered S30
13	0,325	10T	Jonsered S25
15	0,325	10T	Jonsered S25
16	0,325	10T	Jonsered S25
18	0,325	10T	Jonsered S25

	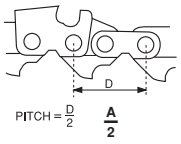	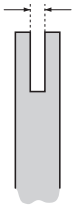	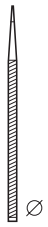	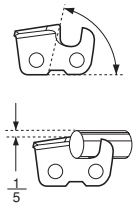	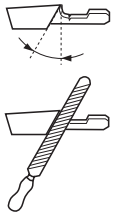		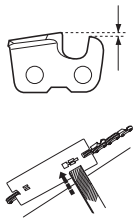	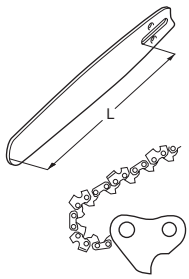
Type	Inch	Inch/mm	Inch/mm	Degree	Degree	Degree	Inch/mm	Inch/cm: dl
S30	0,325"	0,050"/1,3	3/16" /4,8	85°	30°	10°	0,025"/0,65	13"/33:56 15"/38:64 16"/40:66 18"/45:72
S25	0,325"	0,058"/1,5	3/16" /4,8	85°	30°	10°	0,025"/0,65	13"/33:56 15"/38:64 16"/40:66 18"/45:72

EC-declaration of conformity (Applies to Europe only)

Jonsered, SE-561 82 Huskvarna, Sweden, tel: +46-36-146500, declares under sole responsibility that the chain saws Jonsered **2141 Turbo, 2145 Turbo, 2150 Turbo** from 2002's serial numbers and onwards (the year is clearly stated in plain text on the type plate with subsequent serial number), are in conformity with the requirements of the COUNCIL'S DIRECTIVES:

- of June 22, 1998 ”relating to machinery” **98/37/EC**, annex IIA.
- of May 3, 1989 ”relating to electromagnetic compatibility” **89/336/EEC**, and applicable supplements.
- of May 8, 2000 ”relating to the noise emissions in the environment” **2000/14/EC**.

For information relating to noise emissions, see the chapter Technical data.
The following standards have been applied: **EN292-2, CISPR 12:1997, EN608**.

Notified body: **0404, SMP Svensk Maskinprovning AB**, Fyrisborgsgatan 3, SE-754 50 Uppsala, Sweden, has carried out EC type examination in accordance with the machinery directive's (98/37/EC) article 8, point 2c. The certificates for EC type examination in accordance with annex VI, have the number: **404/00/750** - 2141 Turbo, **404/00/750** - 2145 Turbo, **404/00/749** - 2150 Turbo.

In addition, **SMP, Svensk Maskinprovning AB**, Fyrisborgsgatan 3, SE-754 50 Uppsala, Sweden, has certified conformity with annex V of the Council's Directive of May 8, 2000 ”relating to the noise emissions in the environment” 2000/14/EC. The certificate has the number: **01/161/021** - 2141 Turbo/2145 Turbo och **01/161/022** - 2150 Turbo.

The supplied chain saw conforms to the example that underwent EC type examination.

Huskvarna January 3, 2002

Bo Andréasson, Development manager

Jonsered

108 88 35-26

2002W01